ITEM / ARTICLE / ARTICULO # 0134489

LP GAS GRILL
GRIL AU GAZ DE PÉTROLE LIQUÉFIÉ (page 29)
PARRILLA A GAS PROPANO (página 60)

MODEL / MODÈLE / MODELO # 720-0697

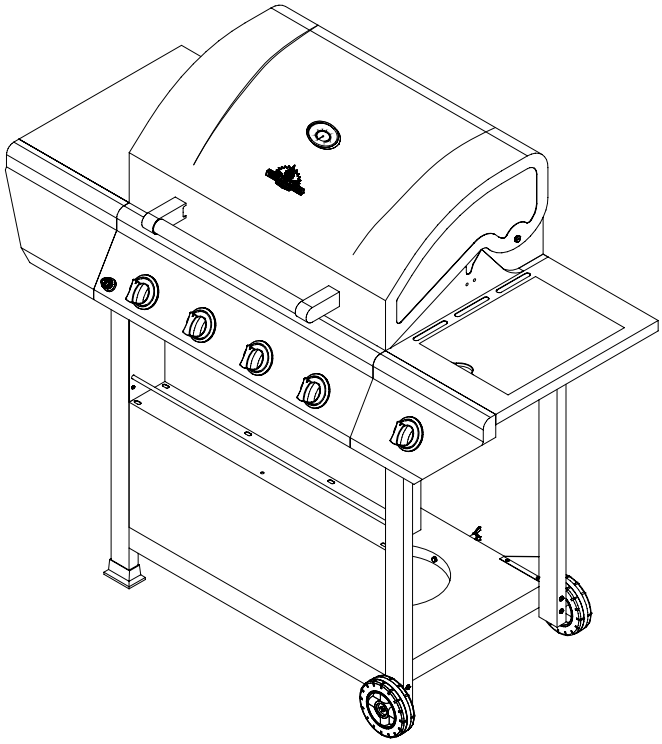

WARNING
To reduce the risk of fire, burn hazard or other injury, read the manual carefully and completely before using your grill.

WARNING
FOR OUTDOOR USE ONLY.

WARNING
This grill is not intended to be installed in or on recreational vehicles and/or boats.

19000512A5

Example only: SERIAL # _____ MFG. DATE _____ PURCHASE DATE: _____

Questions, problems, missing parts? Before returning to your retailer, call our customer service department at 1-800-913-8999 in USA and 1-800-648-5864 in Canada, 7 a.m. - 5 p.m., PST, Monday - Friday
Visit our website at: **www.grillmasterbbqs.com**

TABLE OF CONTENTS

Safety Information....3

Package Contents List....7

Preparation....8

Assembly Instructions....9

Installation Instructions....17

Operating Instructions....20

Care and Maintenance....22

Troubleshooting....24

Warranty....26

Replacement Parts List....27

DANGER

If you smell gas:
1. Shut off gas to the appliance.
2. Extinguish any open flame.
3. Open lid.
4. If odor continues, keep away from the appliance and immediately call your gas supplier or your fire department.

WARNING

1. Do not store or use gasoline or other flammable liquids or vapors in the vicinity of this or any other appliance.

2. An LP cylinder not connected for use shall not be stored in the vicinity of this or any other appliance.

SAFETY INFORMATION

WARNING

WARNING – Hazards or unsafe practices which COULD result in severe personal injury or death.

CAUTION

CAUTION – Hazards or unsafe practices which COULD result in minor personal injury.

WARNING
Do not try lighting this appliance without first reading the “LIGHTING INSTRUCTIONS” section of this manual.

WARNING
Do not use the grill if the odor of gas is present. Contact customer service at 1-800-913-8999 in USA and 1-800-648-5864 in Canada.

WARNING
Never attempt to use damaged equipment. See your local liquid propane dealer for repair.

WARNING
Check all gas supply fittings for leaks before each use. Do not use the grill until all connections have been checked and do not leak. Do not smoke while leak testing. Never leak test with an open flame.

WARNING
Do not install this unit into combustible enclosures. There should be a minimum clearance of 24 inches from all sides to combustible materials.

WARNING
This grill is not intended to be installed in or on recreational vehicles and/or boats.

WARNING
Do not store grill indoors unless the cylinder is disconnected. Do not store cylinder in a building, garage, or any other enclosed area, and keep out of reach of children at all times.

WARNING
Maximum LP gas tank size is 12 inches in diameter by 18-1/2 inches tall. Do not use a tank without an Overfill Prevention Device (OPD), which prevents the tank from being overfilled and possibly damaging your grill.

WARNING
When lighting, keep your face and hands as far away from the grill as possible.

WARNING
Do not leave the grill unattended while cooking.

WARNING
Failure to properly place the burner over the orifice could cause a fire to occur behind and beneath the valve panel, thereby damaging the grill and making it unsafe to operate.

CAUTION
When using a match to light the grill, make sure to use the attached lighting rod.

CAUTION
When using the rotisserie burner, remove the warming rack. High heat from the burner may cause the warming rack to bend.

WARNING
Spiders and insects can nest inside the burners of the grill and disrupt gas flow.

Inspect the grill at least twice a year.

CAUTION
Before cleaning, make sure the gas supply and control knobs are in the “OFF” position and the burners have cooled.

CAUTION
The grill head is heavy and will require two or more people to lift and position onto grill cart.

BEFORE LIGHTING
Inspect the gas supply hoses prior to turning on the gas. If there is evidence of cuts, wear, or abrasion, it must be replaced prior to use.

Only the pressure regulator and hose assembly supplied with the unit should be used. Never substitute regulators for those supplied with the grill. Contact customer service for proper replacement.

Screw the regulator (type QCC1) onto the cylinder. Leak check the hose and regulator connections with a soap and water solution before operating the grill (See “Leak Testing” instructions on page 18).

Do not turn on the gas at the LP gas cylinder unless the gas hose is properly connected to the side burner gas pipe system and all burner valves are in the “OFF” position.

Keep a spray bottle of soapy water near the grill and check the connections before each use.

LP GAS CYLINDER WARNING
1. Do not store or use gasoline or other flammable vapors and liquids in the vicinity of this or any other appliance.
2. A liquid propane cylinder not connected for use should not be stored in the vicinity of this or any other appliance.
3. Do not store spare liquid propane gas cylinders under or near this appliance.
4. Never fill the cylinder beyond 80 percent capacity.
5. Liquid propane cylinders must be provided with a listed overfilling prevention device.
6. If the information above is not followed exactly, a fire resulting in death or serious injury could occur.

Do not use indoors.

WARNING
Do not try lighting this appliance without first reading the “LIGHTING INSTRUCTIONS” section of this manual.

CALIFORNIA PROPOSITION 65 WARNING
The burning of gas fuel generates some by-products, which are known by the State of California to cause cancer or reproductive harm. To minimize exposure to these substances, always operate this unit according to the care and use manual, ensuring you provide good ventilation when cooking with gas.

TESTED IN ACCORDANCE WITH ANSI Z21.58a LATEST STANDARD and CGA 1.6a-2008 STANDARD FOR OUTDOOR COOKING GAS APPLIANCES. THIS GRILL IS FOR OUTDOOR USE ONLY.

Check your local building codes for the proper method of installation. In the absence of local codes, follow either the National Fuel Gas Code, ANSI Z223.1/NFPA 54, or CAN/CGA-B149.1, Natural Gas and Propane Installation Code, Electrical Code, ANSI/NFPA 70

SAFETY PRACTICES TO AVOID INJURY
When properly cared for, your grill will provide safe, reliable service for many years. However, extreme care must be used as the grill produces intense heat that can increase accident potential.

When using this appliance basic safety practices must be followed, including the following:

Do not repair or replace any part of the grill unless specifically recommended in this manual. All other service should be referred to a qualified technician.

The grill is for outdoor use only.
The grill is not intended to be installed in or on recreational vehicles and/or boats.

Children should not be left alone or unattended in an area where the grill is being used. Do not allow children to sit, stand or play on or around the grill at any time.
Do not store items of interest to children around or below the grill or cart. Do not allow children to crawl inside the cart.
Never let clothing, pot holders or other flammable materials come in contact with or too close to any grate, burner or hot surface until it has cooled. The fabric could ignite, causing serious personal injury.
For personal safety, wear proper apparel. Loose fitting garments or sleeves should never be worn while using this appliance. Some synthetic fabrics are highly flammable and should not be worn while cooking.

Only certain types of glass, ceramic, earthenware, or other glazed utensils are suitable for grill use. Other types of materials may shatter with sudden temperature changes. Use only low or medium heat settings in accordance with the manufacturer’s guidelines.
Do not heat unopened food containers as a build-up of pressure may cause the containers to burst.

Use a covered hand when opening the grill lid. Never lean over an open grill.

When lighting a burner, always pay close attention to what you are doing. Make certain you are aware of which burner you are lighting so that your body and clothing remain clear of open flames.

When using the grill, do not touch the grill rack, burner grate or immediate surroundings as these areas become extremely hot and could cause burns. Use only dry potholders. Moist or damp potholders on hot surfaces may cause steam burns. Do not use a towel or bulky cloth in place of potholders. Do not allow potholders to touch hot portions of the grill rack.

Grease is flammable. Let hot grease cool before attempting to handle it. Do not allow grease deposits to collect in the grease tray at the bottom of the grill’s firebox. Clean the grease tray often.
Do not use aluminum foil to line the grill racks or grill bottom. This can severely upset combustion airflow or trap excessive heat in the control area.

For proper lighting and performance of the burners, keep the burner ports clean. It is necessary to clean them periodically for optimum performance. The burners will only operate in one position and must be mounted correctly for safe operation.

Exercise caution when cleaning grill. To avoid steam burns, do not use a wet sponge or cloth to clean the grill while it is hot. Some cleaners produce noxious fumes or can ignite if applied to a hot surface.
Never use a dented or rusty propane cylinder.
Turn off all control knobs and make certain the grill is cool before using any type of aerosol cleaner on or around it. The chemical that produces the spraying action could, in the presence of heat, ignite or cause metal parts to corrode.

Do not use the grill to cook excessively fatty meats or other products, which promote flare-ups.
Do not operate the grill under unprotected combustible constructions. Use only in well ventilated areas. Do not use in buildings, garages, sheds, breezeways or other such enclosed areas.

This unit is intended for outdoor use only.
Keep the areas surrounding the grill free from combustible materials including, fluids, trash, and vapors such as gasoline or charcoal lighter fluid. Do not obstruct the flow of combustion and ventilation air. If the unit is stored indoors, make sure it is cool.
Do not use briquettes of any kind in the grill.

This liquid propane gas grill is designed for optimum performance without the use of briquettes. Do not place briquettes on the flame tamers as this will block the vent to the grill burners. Adding briquettes can damage ignition components, thus voiding the warranty.
Keep the back of the cart free and clear from debris. Keep any electrical supply cord and the fuel supply hose away from any heated surface.
Never use the grill in extremely windy conditions. If located in a consistently windy area (oceanfront, mountaintop, etc.), a windbreak will be required. Always adhere to the clearance specifications.

PLACEMENT OF THE GRILL

WARNING
Do not install this unit in combustible enclosures. There should be a minimum clearance of 24 inches from all sides to combustible materials.

Outdoor cooking appliances should not be used under overhead combustible construction.

When determining a suitable location take into account concerns such as exposure to wind, proximity to traffic paths, and keeping gas supply lines as short as possible.

Place the grill in well-ventilated areas. Never place the grill in a building, garage, breezeway, shed or other such enclosed areas. During heavy use, the grill will produce a lot of smoke.

PACKAGE CONTENTS LIST

A. Firebox Assembly-1pc.	B. Bottom Panel-1pc.	C. Wheel-2pcs.
D. Side Burner Shelf & Control Panel-1pc.	E. Left Side Shelf & Control Panel-1pc.	F. Cart Leg, Front Left-1pc.
G. Cart Leg, Back Left-1pc.	H. Cart Frame, Top-2pcs.	I. Cart Leg, Front Right-1pc.
J. Cart Leg, Back Right-1pc.	K. Cart Caster Insert-2pcs.	L. Cooking Grids-2pcs.
M. Side Burner Control Knob-1pc.	N. Fix Bar-1pc.	O. Triangle Bracket, Left-1pc.
P. Triangle Bracket, Right-1pc.	Q.Tank Bolt-1pc.	R. Cart Beam-1pc.
S. Front Panel-1pc.	T. Condiment Tray-1pc.	U. Side Tube Burner-1pc.

V. 1.5 Volt “AA” Size Alkaline Battery-1pc.	W. Grease Box-1pc. 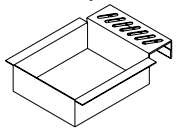	X. Grease Tray-1pc. 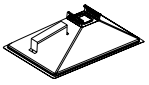
Y. Diagonal Bar Barrier-1pc. 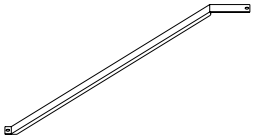	Z. Warming Rack-1pc. 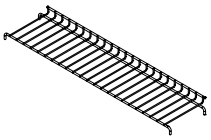	ZA. Flame Tamers-4pcs. 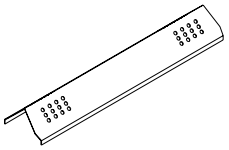

HARDWARE CONTENTS - Pre-installed as noted in instructions that follow.

REF#	Description	QTY
AA	5/32-in. x 10-mm Truss Head Screw	36pcs.
BB	5/32-in. x 9/16-in. Truss Head Screw	2pcs.
CC	1/4-in. x 15-mm Truss Head Screw with Washer	18pcs.
DD	1/4-in. Flat Washer	16pcs.
EE	1/4-in. Axle Flat Washer	2pcs.
FF	1/4-in. Nut	2pcs.

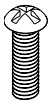
AA

BB

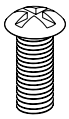
CC

DD

EE

FF

PREPARATION

Before beginning assembly, make sure all parts are present. Compare parts with package contents list and diagram above. If any part is missing or damaged, do not attempt to assemble the product. Contact customer service for replacement parts.

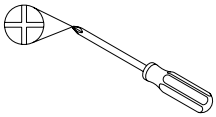
Phillips Screwdriver

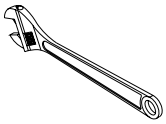
Wrench

- Estimated Assembly Time: 40 minutes
- Tools Required for Assembly:

  Phillips Screwdriver (not included) and Wrench (not included)

- Note: The right and left sides of the grill are designated as if you are facing the front of the grill.

1. Cart Caster and Cart Assembly

a) Place the Cart Caster Inset (K) into the Cart Leg, Front Left (F) and Cart Leg, Back Left (G). As shown in Fig. 1.

Fig. 1

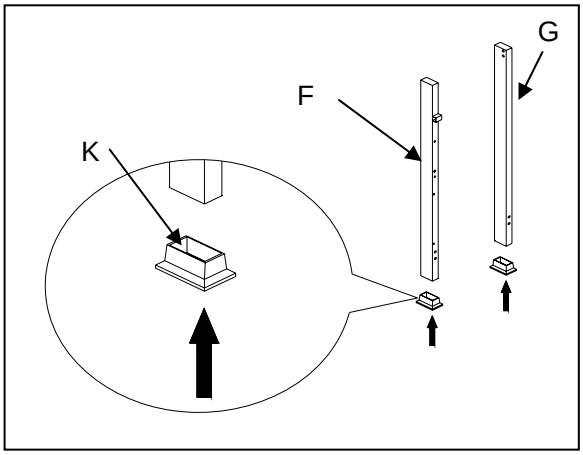

b) Loosen, but do not remove the screws that are pre-assembled on the Cart Leg, Front Left (F) and Cart Leg, Back Left (G). Attach Cart Leg, Front Left (F) and Cart Leg, Back Left (G) to Cart Frame (H), by aligning the holes on the Cart Frame (H). Tighten the screws that were loosened above.

Note: Make sure the flat side of Cart Frame (H) faces inside to the right when attaching. As shown in Fig. 2.

Fig. 2

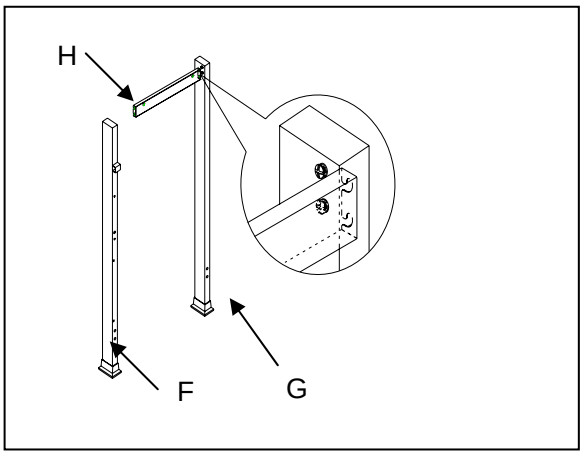

c) Loosen, but do not remove the screws that are pre-assembled on the Cart Leg, Front Right (I) and Cart Leg, Back Right (J). Attach Cart Leg, Front Right (I) and Cart Leg, Back Right (J) to Cart Frame (H), by aligning the holes on the Cart Frame. Tighten the screws that were loosened above.

Note: Make sure the flat side of Cart Frame (H) faces inside to the left when attaching. As shown in Fig. 3.

Fig. 3

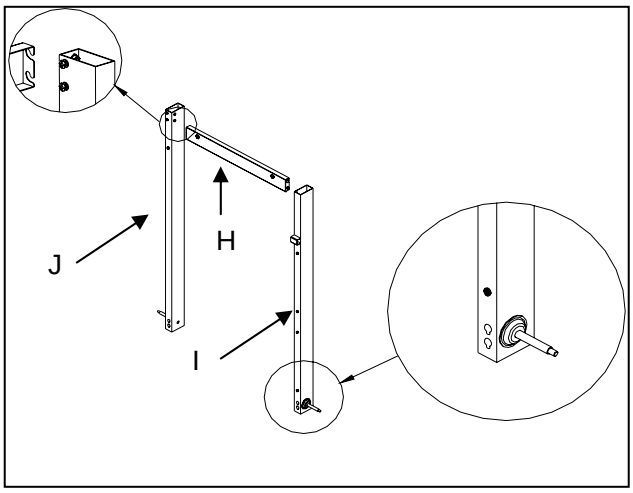

2. Bottom Panel Assembly

a) Loosen, but do not remove the screws that are pre-assembled on the side of the Bottom Panel (B), align the holes on the Cart Leg, Front Left (F) and Cart Leg, Back Left (G), then place the Cart Legs onto the screws that were loosened in the Bottom Panel (B). As shown in Fig. 4.

b) Tighten the screws from outside to inside. There is a hole in the outside of the cart leg. As shown in Fig. 4.

c) Repeat step 2a and 2b to attach right legs to the bottom panel making sure all screws are tight.

d) Secure the tank bolt to the bottom panel (B). As shown in Fig. 4.

Fig. 4

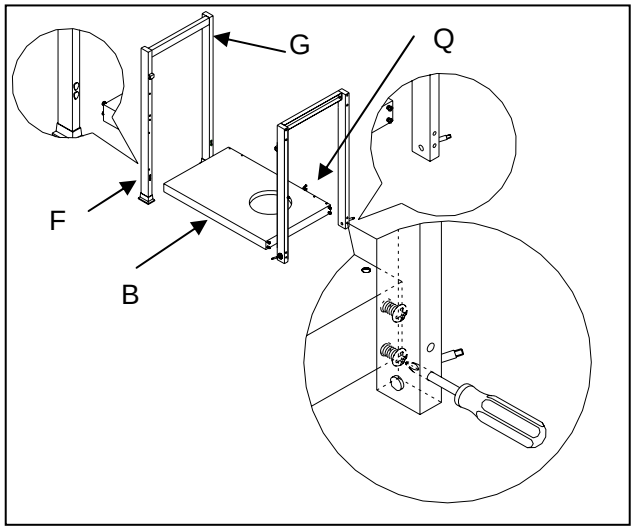

3. Triangle Bracket Assembly

a) Loosen, but do not remove four screws on Bottom Panel (B), two screws on Cart Leg, Back Left (G) and two screws on Cart Leg, Back Right (J). Align the holes of the Triangle brackets with the screws in the Bottom Panel (B) and Cart Leg, Back Left (G) and Cart Leg, Back Right (J) to connect Triangle Bracket, Left and Right (P,O) to Cart Leg, Back Left (G) and Cart Leg, Back Right (J). As shown in Fig. 5.

b) Tighten the screws that were loosened in step 3a.

Note: The flat portion of the triangle should face the rear of the grill.

Fig. 5

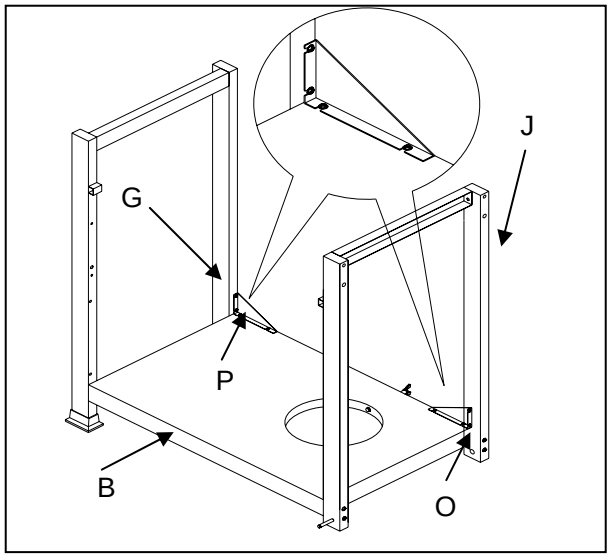

4. Front Panel Assembly

a) Loosen, but do not remove the screws which are pre-assembled on the cart legs, align the holes on the front panel (S) with the screw in the legs, then place the front panel (S) onto the screws in the cart legs. As shown in Fig. 6.

b) Tighten the screws that were loosened in step 4a.

Note: Flat facing side of the front panel (S) should face out.

Fig. 6

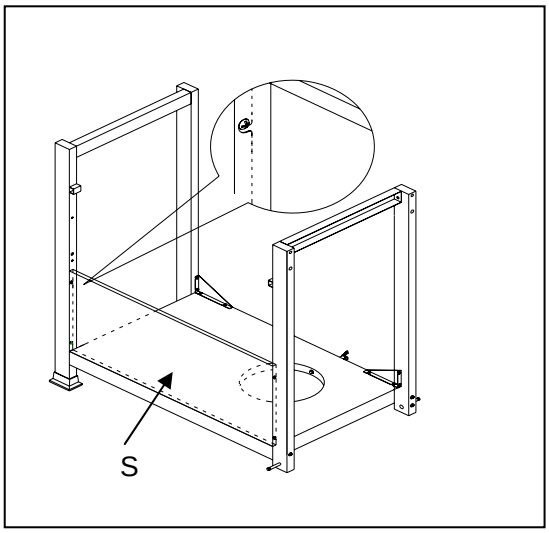

Fig. 7

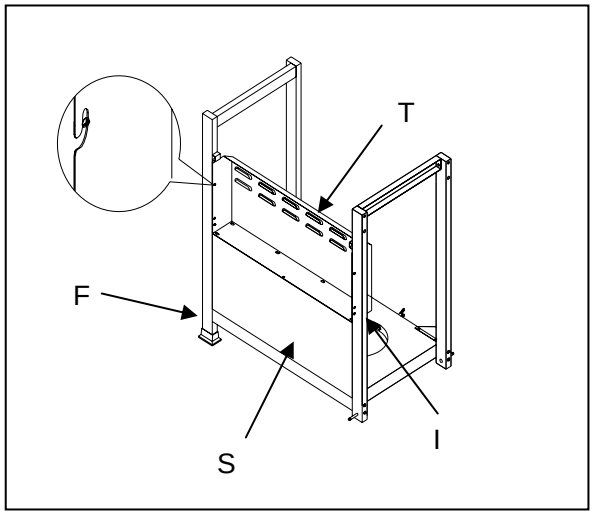

5. Condiment Tray Assembly

a) Remove the screws which are pre-assembled on the Front Panel (S),attach the condiment tray (T) to Cart Leg, Front Left (F) and Cart Leg, Front Right (I) by loosening the two screws in the each cart leg. Align the holes of the Condiment Tray (T) with the screws. Note there are two tabs that align the Front Panel (S) and the Condiment Tray (T). As shown in Fig. 7.

b) Tighten the cart legs screws that were loosened in step 5a.

c) Replace the left and right screws. Remove from Front Panel (S) in step 5a. Place them through the holes on Condiment Tray (T) into Front Panel (S).

Note: Middle screw will be used during step 8.

Fig. 8

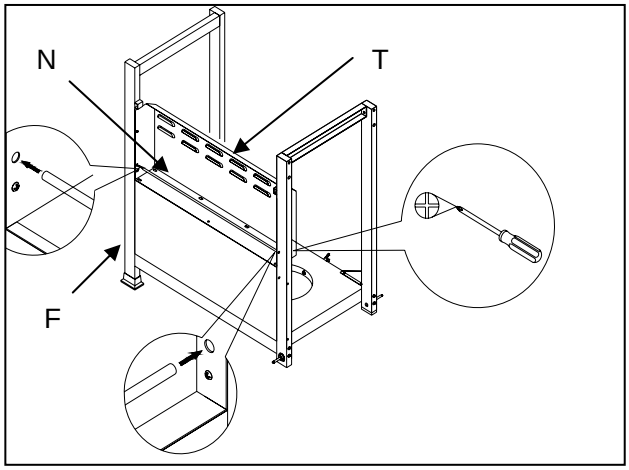

6. Fix Bar Assembly

Loosen the screw which is pre-assembled at the rear of the Cart Leg Front Left (F), then place the Fix Bar (N) in the pre-drilled hole on the left side of the Condiment Tray (T). Push all the way in and then place right side of Fix Bar (N) into the pre-drilled hole on the right side of the Condiment Tray (T). Push Fix Bar (N) all the way to the right and then tighten the pre-assemble screw located at the rear of Cart Leg, Front Left (F).

Fig. 9

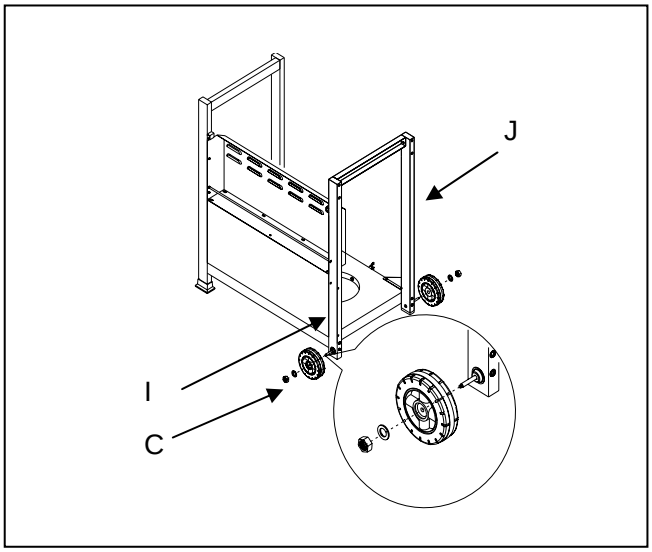

7. Wheel Assembly

a) Remove the nuts and washers which are pre-assembled on the short axle, place the wheels (C) on the Axle which stable in the Cart Leg, Front Right (I) and Cart Leg, Back Right (J). As shown in Fig. 9.

b) Place washers and nuts to the axle and tighten the nuts.

Fig. 10

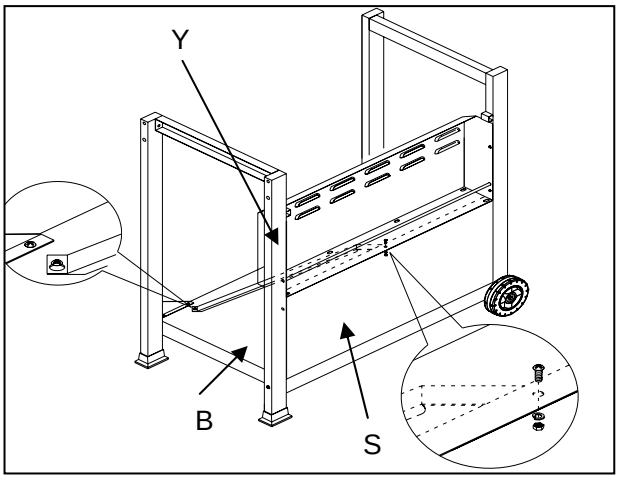

8. Diagonal Bar Barrier Assembly

Loosen but do not remove the one screw which is pre-assembled on the Bottom Panel (B). Secure solid end of the Diagonal Bar Barrier (Y) to the underside of the Front Panel (S) through the middle hole with screw removed in step 5,then secure other end of Diagonal Bar Barrier (Y) by clipping the open hole onto the screw which pre-assembled on the Bottom Panel (B). Tighten the loosened screw. As shown in Fig. 10.

Fig. 11

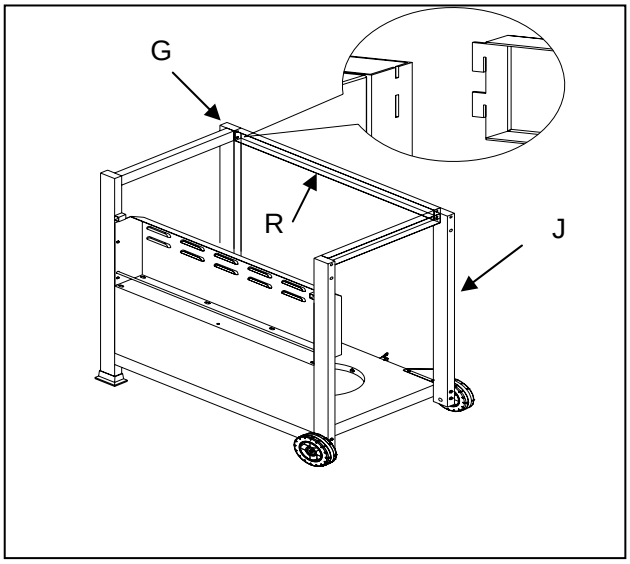

9. Cart Beam Assembly

Insert the Cart Beam (R) into Cart Leg, Back Left (G) and Cart Leg, Back Right (J), aligning the holes. The Cart Beam (R) will fit into holes. As shown in Fig. 11.

10. Firebox Assembly

NOTE: We suggest two persons lift the firebox when assembling. Be sure to remove all packaging material during assembly.

a) Remove two screws which are pre-assembled on the Cart Leg Back Right (J) and Cart Leg Back Left (G). As shown in Fig. 13.

b) Remove the four screws that are attached to cart frame (H). 2 screws on the left and 2 on the right.

c) Remove the Firebox Assembly (A) from the carton and carefully place onto the grill cart. Lid handle will face front and be above front panel. As shown in Fig. 12.

d) Once the firebox is in place, secure the Firebox Assembly (A) to Cart Leg Back Right (J) and Cart Leg Back Left (G) using the screws removed in step 10a. As shown in Fig. 13. A.

Note: Gas hose and regulator will be in front of Cart Leg, Front Right (I).

e) Install the four screws that were removed in step 10b securing the firebox to the cart frames. As shown in Fig. 13. B.

Fig. 12

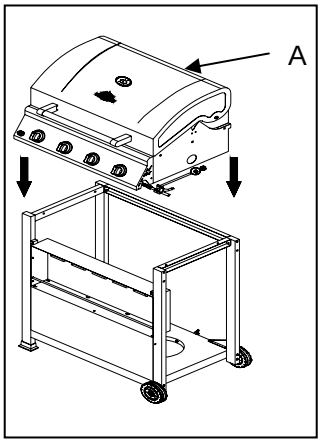

Fig. 13. A

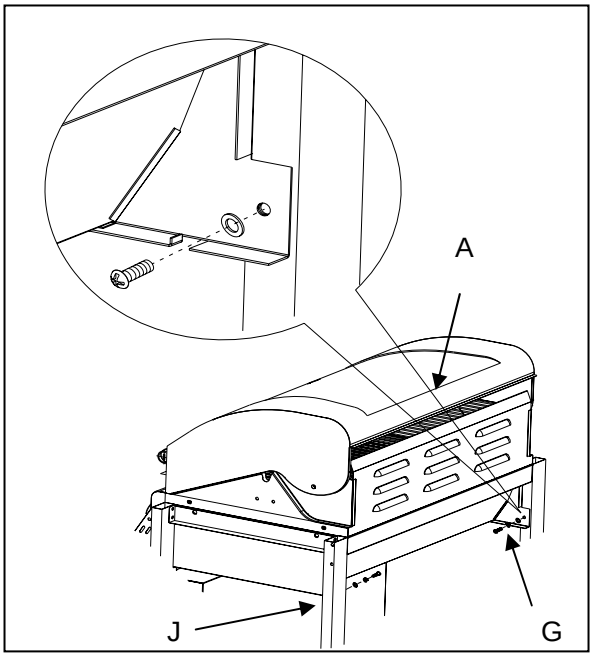

Fig. 13. B

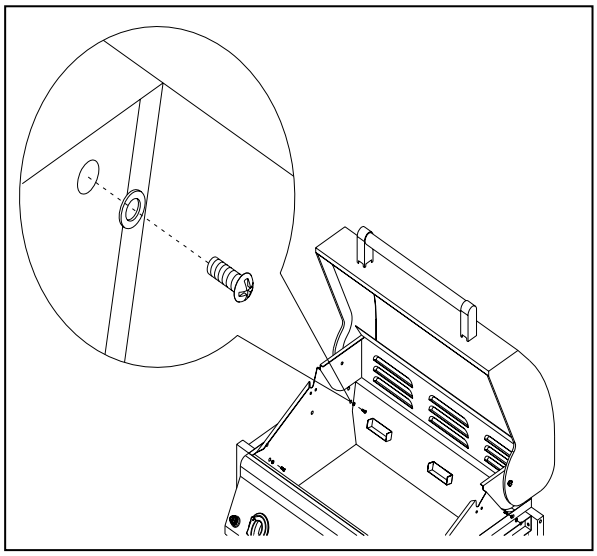

11. Side Burner Shelf Assembly

a) Loosen but do not remove the screws which are pre-assembled on the cart leg. Remove the two screws that are attached to the Side Burner Shelf (D) frame and the two screws that are attached to the main control panel.

b) Align the holes on Side Burner Shelf (D) with the loosened screws located on the cart leg.

c) Secure Side Burner Shelf (D) from inside firebox using two screws that were remove in step 11a to attach the Side Burner Shelf (D) to the main firebox.

d) Secure the Side Burner Shelf Control Panel (D) and main control panel by two screw s which are pre-assembled on the main control panel. As shown in Fig. 14. Tighten all screws.

e) Tighten screws loosened in 11a. Ensure all screws are tight.

12. Left Side Shelf Assembly

Repeat Step 11 to assemble Left Side Shelf (E). As shown in Fig. 15.

13. Side Burner Valve Installation

a) Insert the side burner vavle into the Side Burner Shelf Control Panel (D). Align the screws on the valve with the large side of the holes on the bezel. Slightly loosen the screws without removing the screws. Slide the screws down to the smaller holes and tighten the screws to secure. As shown in Fig. 16.

b) Insert Side Burner Control Knob (M) onto the valve stem and tighten it. As shown in Fig. 17.

Fig. 14

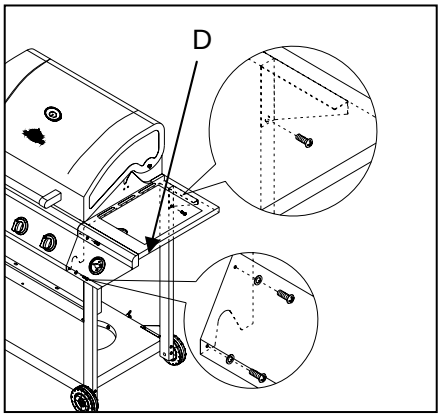

Fig. 15

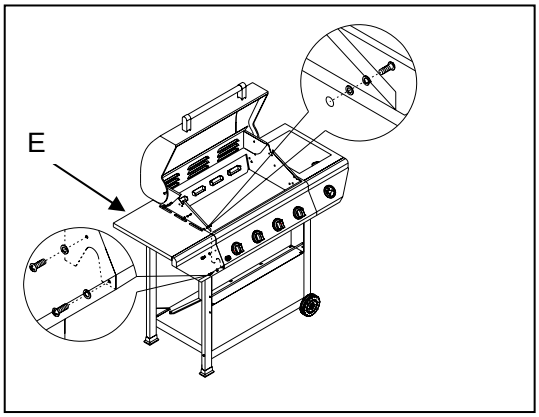

Fig. 16

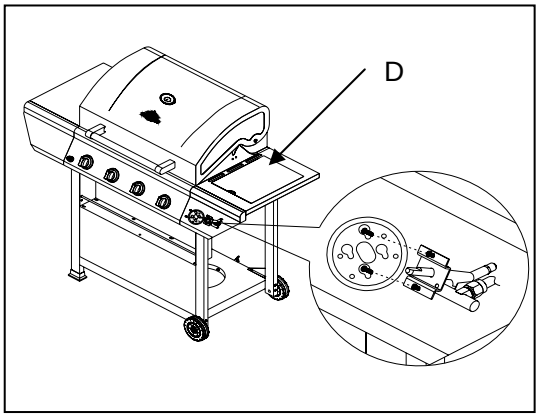

Fig. 17

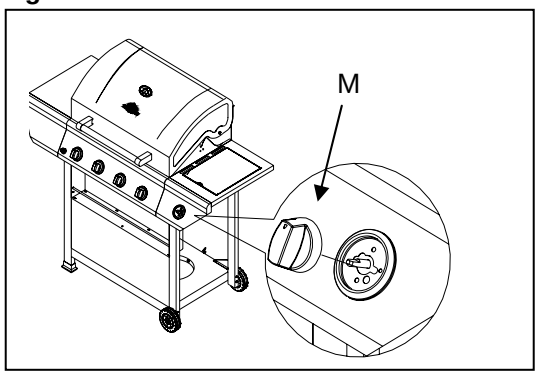

14. Side Burner Installation

a) From underneath the side burner remove two screws which are assembled on the bottom of the side tube burner (U). Open side burner lid and place the Side Tube Burner (U) through the opening. Place the Side Tube Burner (U) tube over the side burner gas valve and make sure Side Burner gas valve is inserted into side burner tube. As shown in Fig. 18.

b) Then with two screws removed in step 11a secure the side burner from underneath to the Side Burner Shelf (D). As shown in Fig. 18.

c) Connect ignition wire from Firebox Assembly (A) control panel to the side burner igniter pin from underneath the Side Burner Shelf & Control Panel (D). As shown in Fig. 18.

Note: After completing side burner installation, make sure here is no more than a 3 mm gap between igniter pin and burner. As shown in Fig. 19.

Fig. 18

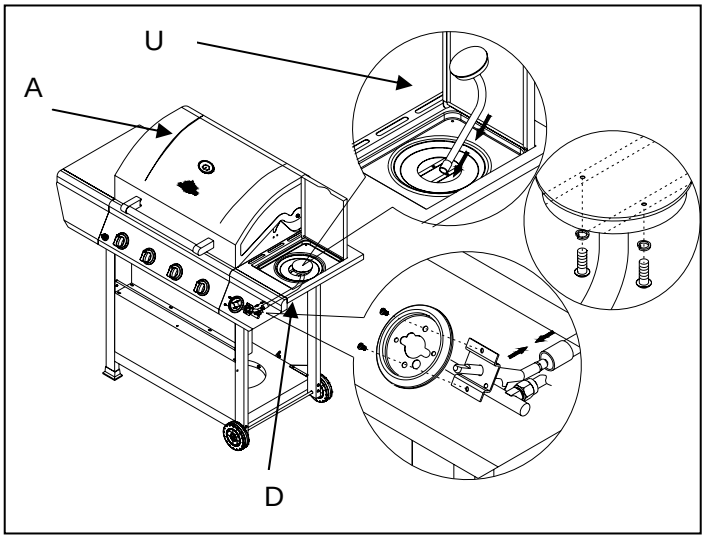

Fig. 19

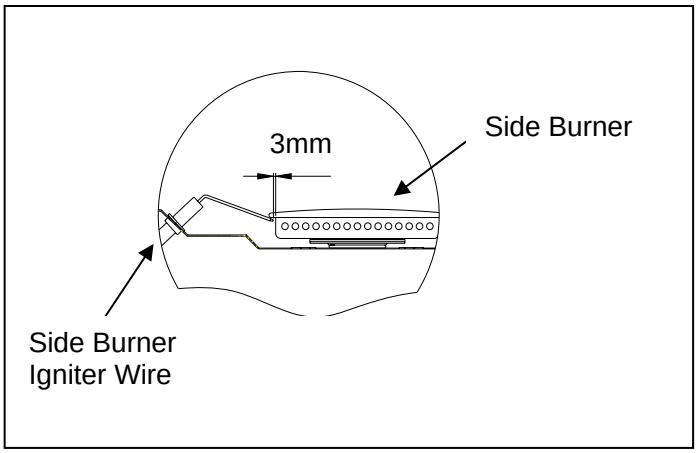

15. Electronic Igniter Battery Installation

Unscrew the electronic igniter button and place the battery (V) into the housing with the positive terminal (+) facing outward. Replace the ignition button after the battery has been installed. As shown in Fig. 20.

Fig. 20

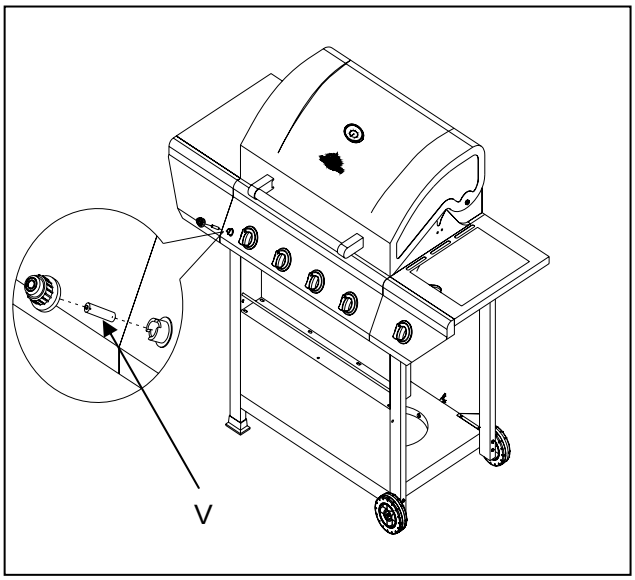

16. Install the Grease Tray

Install the Grease Tray (X) from the rear of the grill by sliding the tray on the glides at the rear of the grill until centered under the cooking area. Install Grease box (W) under the grease tray. As shown in Fig. 21.

Fig. 21

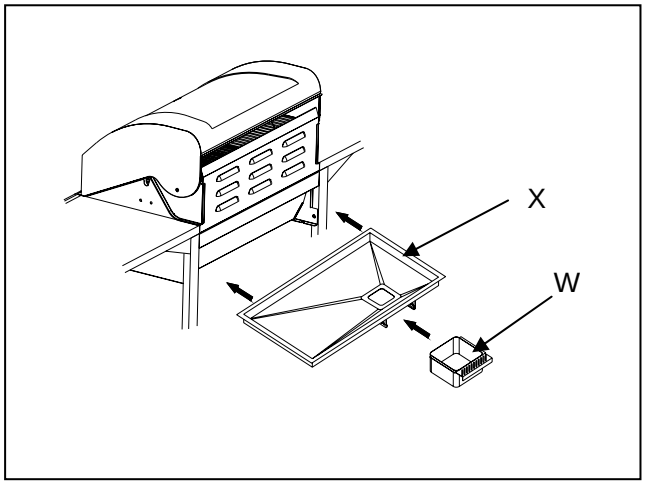

17. Position Flame Tamers and Cooking Grids

a) The Flame Tamers (ZA) are shipped in the main firebox assembly. Please check the placement of and make sure the Flame Tamers (ZA) in the channels to ensure the Flame Tamers (ZA) are centered over the burners. As shown in Fig. 22.

b) The Cooking Grids (L) are also shipped in the Firebox Assembly (A). Place the Cooking Grids (L) in the main firebox assembly before using your grill. The Cooking Grids (L) should be positioned from the front of the firebox to the rear for a proper fit. As shown in Fig. 22.

Fig. 22

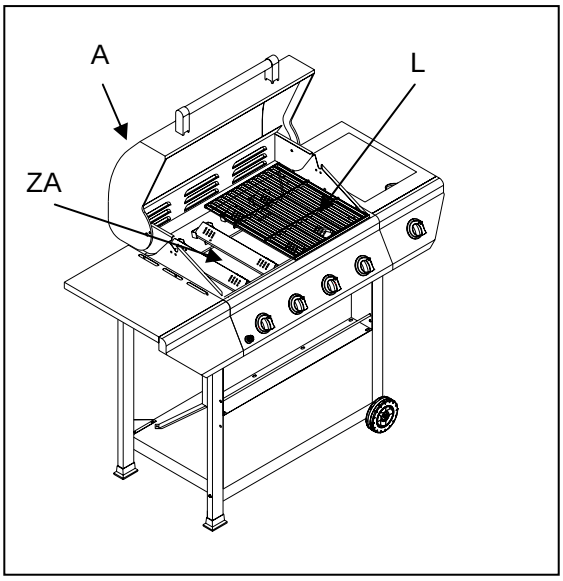

18. Liquid Propane Tank Installation

From rear of grill place the liquid propane tank into the Bottom Panel (B) hole and tighten the Tank Bolt (Q) to secure. As shown in Fig. 23.

Always keep the LP cylinder at 90° (upright) orientation to provide vapor withdraw.

Fig. 23

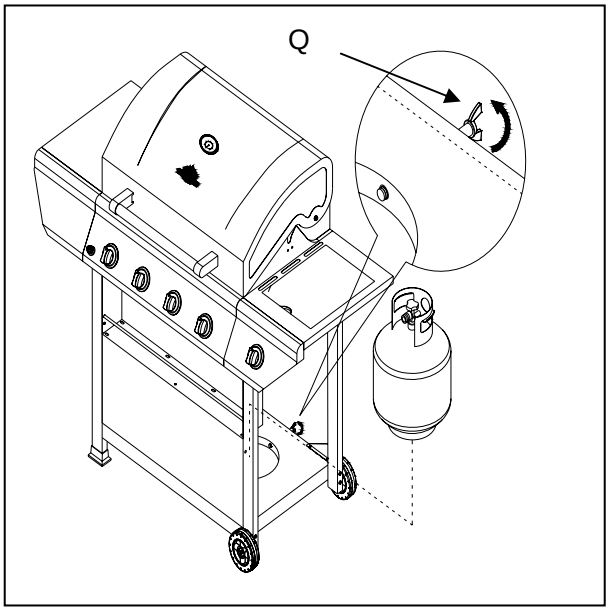

19. Liquid Propane Hook-Up

Attach the regulator to the propane cylinder by turning the regulator handle clockwise as shown in Fig. 24. If the outdoor cooking appliance is not in use, the gas must be turned “Closed” position at the Liquid Propane Cylinder.

Check all gas supply fittings for leaks before each use. Do not use the grill until all connections have been checked and do not leak (see “Leak Testing” instructions on page 18).

Fig. 24

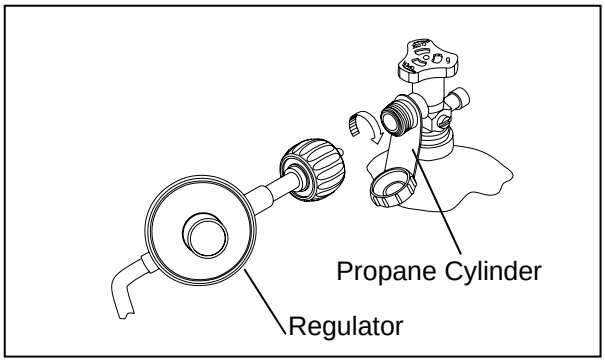

INSTALLATION INSTRUCTIONS

GAS HOOK-UP

Only the pressure regulator and hose assembly supplied with the grill should be used. Any replacement pressure regulator and hose assembly must be specified by the grill manufacturer.
This grill is configured for Liquid Propane. Do not use a Natural Gas supply.

Total gas consumption (per hour) with all burners set on “HI”:

Main burners	48,000 BTU/Hr.
Side burner	12,000 BTU/Hr.
Total	60,000 BTU/Hr.

The installation of this appliance must conform with local codes or, in the absence of local codes, with either the National Fuel Gas Code, ANSI Z223.1/NFPA 54, National Gas Propane Installation Code, CSA B149.2.
Installation in Canada must be in accordance with the Standard CAN/CGA-B149.2 (installation code for gas burning appliances and equipment) and local codes.

LIQUID PROPANE CYLINDER REQUIREMENTS (20-lb. Cylinder)

A dented or rusty Liquid Propane Cylinder may be hazardous and should be checked by your supplier. Never use a cylinder with a damaged valve. The Liquid Propane Cylinder must be constructed and marked in accordance with the specifications for Liquid Propane Cylinders by the United States Department of Transportation (DOT) or the National Standard of Canada, CAN/CSA-B339, Cylinders, Spheres and Tubes for Transportation of Dangerous Goods Commission.

The 20-lb. Cylinder must have a shut off valve terminating in a valve outlet specified, as applicable, for connection type QCC1 in the standard for compressed gas cylinder valve outlet and inlet connection ANSI/CGA-V-1.

Storage of an outdoor cooking gas appliance indoor is permissible only if the cylinder is disconnected and removed from the outdoor cooking gas appliance. The Cylinder system must be arranged for vapor withdrawal. The cylinder must include a collar to protect the Cylinder valve.

Manifold pressure: (operating) 11 inches water column (W.C.), (non-operating) 11.2 inches water column (W.C.).

Liquid Propane Cylinders must be provided with a listed overfilling prevention device.

Remove the plastic valve cover from the Liquid Propane Cylinder. Make sure the grill gas hoses do not contact the grease pan or grill firebox when the Liquid Propane Cylinder is placed into the cart.

CONNECTING THE LIQUID PROPANE CYLINDER

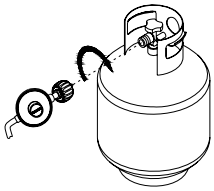

To connect the Liquid Propane Gas Supply Cylinder:

a) The cylinder valve should be in the “OFF” position. If not, turn the valve clockwise until it stops.
b) Make sure the cylinder valve has the proper type-1 external male thread connections per ANSI Z21.81.
c) Make sure the burner valves are in the “OFF” position.
d) Inspect the valve connections, port and regulator assembly. Remove debris and inspect the hose for damage.
e) When connecting the regulator assembly to the valve, use your hand to tighten the nut clockwise until it stops. Use of a wrench could damage the quick coupling nut and result in a hazardous situation.
f) Open the cylinder valve fully by turning the valve counterclockwise.
g) Before lighting the grill, use a soap and water solution to check all the connections for leaks.
h) If a leak is found, turn the cylinder valve “OFF” and do not use the grill until a local Liquid Propane dealer can make repairs.

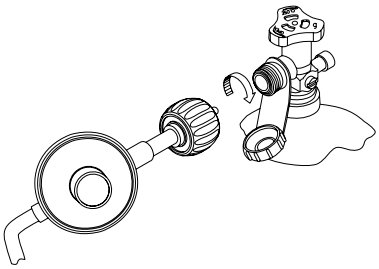

Please make sure the cylinder valve connection device shall properly and safely mate with the connection device attached to the inlet of the pressure regulator.

WARNING
Never attempt to use damaged or obstructed equipment. See your local Liquid Propane dealer for repair.

DISCONNECTING THE LIQUID PROPANE CYLINDER

1. Turn the grill burner valves “OFF” and make sure the grill is cool.
2. Turn the Liquid Propane Cylinder valve “OFF” by turning clockwise until it stops.
3. Detach the regulator assembly from the cylinder valve by turning the quick coupling nut counterclockwise.
4. Place dust cap on cylinder valve outlet whenever the cylinder is not in use. Only install the type of dust cap on the cylinder valve outlet that is provided with the cylinder valve. Other types of caps or plugs may result in leakage of propane.

LEAK TESTING

GENERAL

Although gas connections on the grill are leak tested prior to shipment, a complete leak test must be performed at the installation site. Before each use, check all gas connections for leaks using the procedures listed below.
If the smell of gas is detected at any time, you should immediately check the entire system for leaks.

BEFORE TESTING

Make sure all packing materials have been removed from the grill, including the burner tie-down straps.

WARNING
Check all gas supply fittings for leaks before each use. Do not use the grill until all connections have been checked and do not leak. Do not smoke while leak testing. Never leak test with an open flame.

Make a solution of one part liquid detergent and one part water. You will need a spray bottle, brush, or rag to apply the solution to the fittings. For the initial leak test, make sure the Liquid Propane Cylinder is full.

TO TEST

1. Turn the burner valves off.
2. Turn the Liquid Propane Cylinder valve counterclockwise to open the valve.
3. Apply the soap solution to all gas fittings. Soap bubbles will appear where a leak is present.
4. If a leak is present, immediately turn the gas supply “OFF” and tighten leaky fittings.
5. Turn the gas back “ON” and recheck.
6. Should the gas continue to leak from any of the fittings, turn the gas supply “OFF” and contact customer service at 1-800-913-8999 in USA and 1-800-648-5864 in Canada.
7. If there is evidence of excessive abrasion or wear, or the hose is cut, it must be replaced prior to the outdoor cooking gas appliance being put into operation.

Only those parts recommended by the manufacturer should be used on the grill. Substitutions will void the warranty.

WARNING

1. Storage of an outdoor cooking gas appliance indoor is permissible only if the cylinder is disconnected and removed from the outdoor cooking gas appliance.
2. Cylinder must be stored outdoors out of the reach of children and must not be stored in a building, garage or any other enclosed area.

INSTALLER FINAL CHECK

- Maintain specified clearance of 24 inches from combustible materials and construction.
- All internal packaging has been removed.
- The hose and regulator are properly connected to the Liquid Propane Cylinder.
- The unit has been tested and is free of leaks.
- The gas supply shutoff valve has been located.
- All burners are installed.

WARNING

1. Do not store spare Liquid Propane Cylinders under or near this appliance.
2. Never fill the cylinder beyond 80 percent capacity.
3. If the information above is not followed exactly, a fire, possibly causing serious injury or death, may occur.

It is very important to keep your grill clear and away from any combustible materials. Maintain at least 24 inches of clearance from sides and back and do not use under overhead combustible construction.

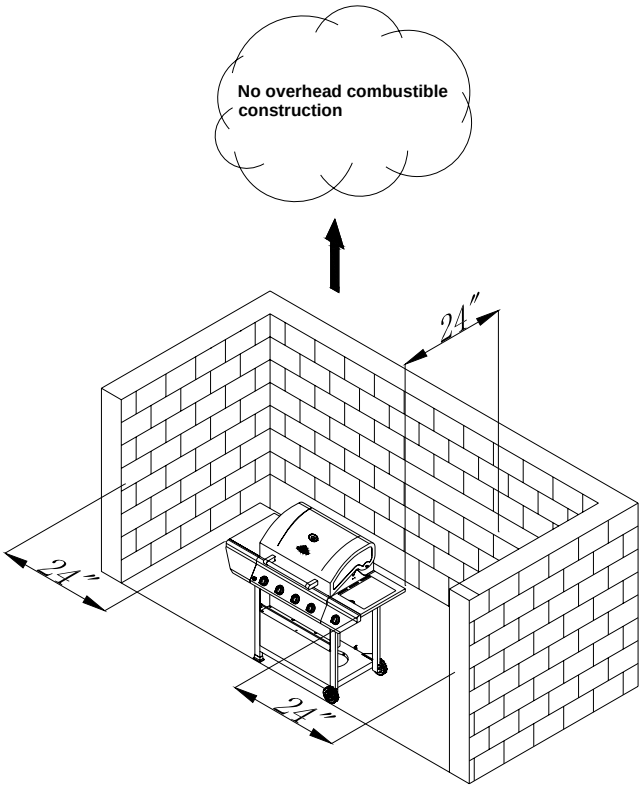

OPERATING INSTRUCTIONS

General Use of the Grill

Each main burner is rated at 12,000 BTU/Hr. The main grill burners encompass the entire cooking area and are side ported to minimize blockage from falling grease and debris. Above the burners are flame tamers. The igniter knobs are located on the center portion of the valve panel. Each rotary igniter is labeled on the control panel.

Using the Grill

Grilling requires high heat for searing and proper browning. Most foods are cooked at a “HI” heat setting for their entire cooking time. However, when grilling large pieces of meat or poultry, it may be necessary to turn the heat to a lower setting after the initial browning. This method cooks the food thoroughly without burning the outside.

Food cooked for a long time or basted with a sugar-based marinade may need a lower heat setting near the end of its cooking time.

To begin:

1. Make sure the grill has been leak tested and is properly placed. (See page 18.)
2. Remove any remaining packing materials.
3. Light the grill burners using the Lighting Instructions on next page.
4. Turn the control knob(s) to the “IGNITE / HI” setting, and preheat the grill for 15 minutes. The grill lid should be closed during the pre-heat period.
5. Place the food on the grill and cook to the desired degree of preparation. If necessary, adjust the heat setting. The control knob may be positioned at any setting between “HI” and “LO”.

LIGHTING INSTRUCTIONS

Before Lighting
Inspect the gas supply hose prior to turning on the gas. If there is evidence of cuts, wear, or abrasion, it must be replaced prior to use.

Screw the regulator (type QCC1) onto the cylinder, and leak check the hose and regulator connections before operating the grill (see the “Leak Testing” instructions on page 18).

Only the pressure regulator and hose assembly supplied with the unit should be used. Never substitute regulators. If a replacement is necessary, contact customer service for proper replacement.

⚠WARNING
Do not use the grill if the odor of gas is present. Contact customer service at 1-800-913-8999 in USA and 1-800-648-5864 in Canada.

TO LIGHT THE MAIN BURNERS
1. Open lid during lighting.
2. Make sure all the knobs are in the “OFF” position, and then turn the Liquid Propane Cylinder valve “ON” by slowly turning counterclockwise.
3. Push and turn Main Burner control knob to IGNITE/HI, at the same time, press and hold electronic ignition button to light the burner.
4. Once the burner is lit, release the electronic ignition button and knob.
5. If ignition does not occur in 5 seconds, turn the knob to OFF, wait 5 minutes and repeat the lighting procedure or light by match.

TO LIGHT THE SIDE BURNER
1. Push and turn Side Burner control knob to IGNITE/HI, at the same time, press and hold electronic ignition button to light the burner.
2. Once the burner is lit, release the electronic ignition button and knob.
3. If ignition does not occur in 5 seconds, turn the knob to OFF, wait 5 minutes and repeat the lighting procedure or light by match.

Fig. 25

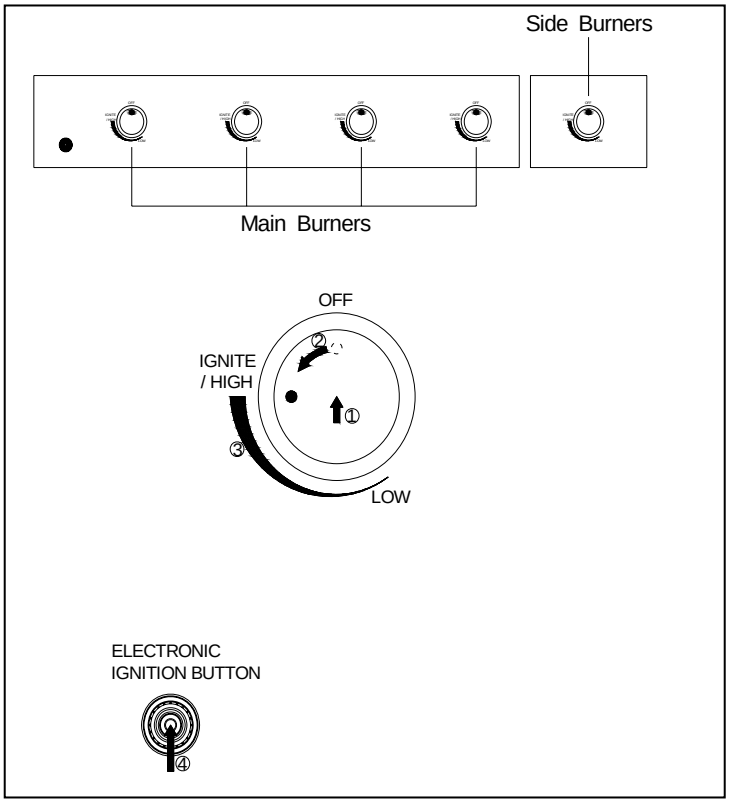

TO MATCH LIGHT THE GRILL

If a burner will not light after several attempts using the control knobs, the burners may be lit with a match.

WARNING

When lighting, keep your face and hands as far away from the grill as possible.

CAUTION

When using a match to light the grill make sure to use the attached lighting rod.

CAUTION

Remove the warming rack when using a match to light the rotisserie burner.

Main Burner

1. If you have already attempted to light the main burner with the igniter, allow 5 minutes for any accumulated gas to dissipate.
2. Insert a match into the lighting rod as shown Fig. 26.
   Ignite the match and insert through the cooking grids to the burner.
3. If the burner does not light within seconds turn the knob to the “OFF” position, wait 5 minutes and try again.

Side Burner

1. If you have already attempted to light the side burner with the igniter, allow 5 minutes for any accumulated gas to dissipate.
2. Insert a match into the lighting rod as shown in Fig. 26. Ignite the match and hold next to the burner.
3. Push and turn the Side Burner knob slowly to IGNITE/HI. The burner should light immediately.
4. If the burner does not light within 5 seconds turn the knob off, wait 5 minutes and try again.

Fig. 26

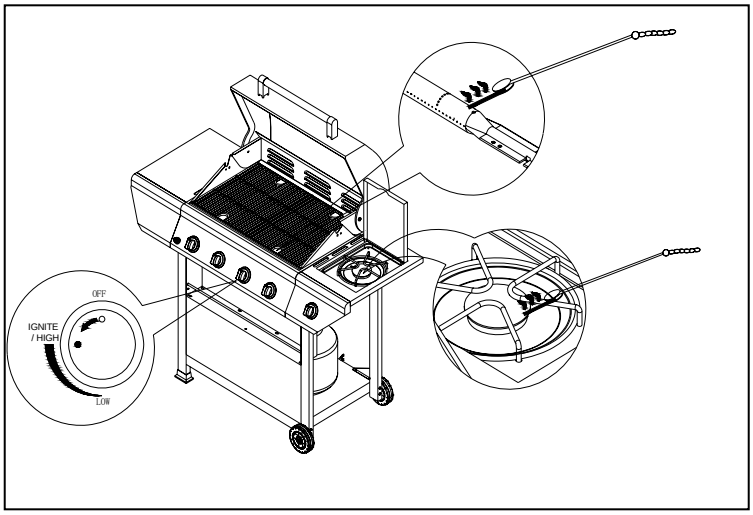

CARE AND MAINTENANCE

Stainless Steel

There are many stainless steel cleaners available. Always use the mildest cleaning process first, scrubbing in the direction of the grain. Do not use steel wool as it will scratch the surface. To touch up noticeable scratches in the stainless steel, sand very lightly with dry 100 grit sand paper in the direction of the grain.

Grease specks can gather and bake onto the surfaces of the stainless steel, giving the appearance of rust. For removal, use an abrasive pad with a stainless steel cleaner.

Cooking Grates

The easiest way to clean the grill is immediately after cooking is completed and the flames have been turned off.

Wear a barbeque mitt to protect your hand from heat and steam.
Scrub the hot cooking grates by dipping a bristled barbeque brush in tap water. Cleaning will be more difficult if the grill is allowed to cool.

Grease Pan
The grease pan should be emptied, wiped down and washed after each use with a mild detergent and warm water solution. Check the grease pan frequently and do not allow excess grease to accumulate and flow out of the grease pan.

Grill Burners
Extreme care should be taken when removing a burner. It must be correctly centered on the orifice before any attempt is made to relight the grill. Frequency of cleaning will depend on how often you use the grill. Failure to properly place the burner over the orifice could cause a fire to occur behind and beneath the valve panel, thereby damaging the grill and making it unsafe to operate.

Before cleaning, make sure the gas supply and control knobs are in the “OFF” position and the burners have cooled.

Fig. 27

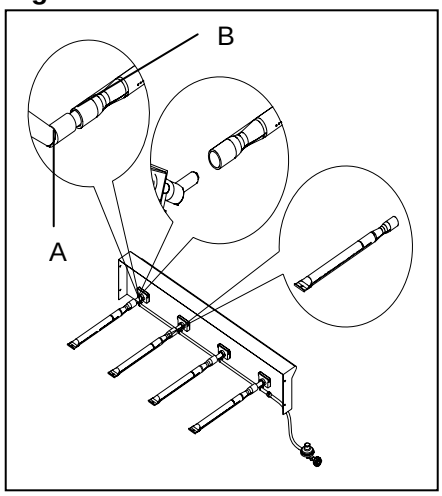

To remove the main burners for cleaning:
1. Locate the burner screw at the rear of the firebox.
2. Remove the screw and lift the burner out of the firebox.

To clean the grill burners:
1. Clean the exterior of the burner with a wire brush. Use a metal scraper for stubborn stains or debris.
2. Clear clogged ports with a straightened paper clip. Never use a wooden toothpick as it may break off and clog the port.
3. Check and clean burners / venture tubes for insects and insect nests. A clogged tube can lead to a fire beneath, and behind the main control panel.

To reinstall the main burners:
1. Insert the burner over the main burner gas valve (part# 15 on Page 27).
2. Make sure the orifice stud (A) is inside the burner venture (B) as shown in Fig. 27.
3. Align the burner screw hole with the firebox hole, insert screw and tighten.

CAUTION
1. Keep outdoor cooking gas appliance area clear and free from combustible materials, gasoline and other flammable vapors and liquids.
2. Do not obstruct the flow of combustible and ventilation air.
3. Keep the ventilation opening(s) of the enclosure free and clear from debris.

Flame Characteristics
Check for proper burner flame characteristics. Burner flames should be blue and stable with no yellow tips, excessive noise, or lifting as shown in Fig. 28. The following steps should be followed for correcting the flame characteristics:
1. Turn the control knobs and Liquid Propane Cylinder valves “OFF.”
2. Allow the grill and burners to cool.
3. If the flame is yellow (not enough air), turn the adjustment screw found at the front of the burner counterclockwise.
4. If the flame is noisy or lifts away from the burner (too much air), turn the adjustment screw clockwise.
5. If these adjustments do not correct the problem, contact customer service at 1-800-913-8999 in USA and 1-800-648-5864 in Canada.

Fig. 28

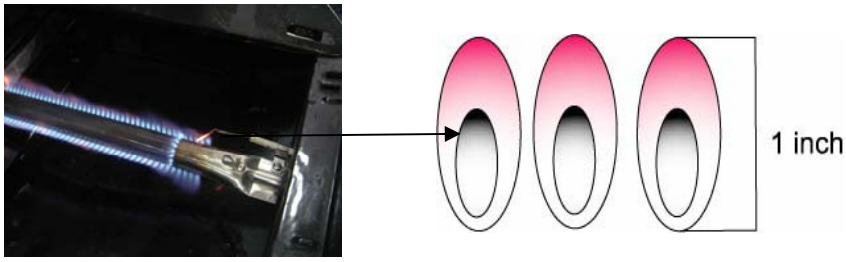

TROUBLESHOOTING

Problems	Possible Solutions
Grill will not light.	1. Push and turn the knob and check for sparks. 2. If there is a spark, check to make sure gas is supplied to the burner. a. Purge the line of any trapped air. b. Check to see if you can match-light the burner. c. Check to see that the other burners operate normally. d. Visually check the electrode and wire while pushing the igniter knob. If a spark occurs anywhere but the igniter tip, the igniter must be replaced.
Burner flame is yellow and there is a noticeable gas odor.	1. Check the burner inlet for obstruction, especially for spiders and other insects. 2. Check the air shutter for proper adjustment. 3. Check for the source of gas leaks.
Excessive flare-ups.	1. Hood up when grilling. 2. Keep knobs on low. 3. Turn one burner off if necessary. 4. Post heat grill for 10-15 minutes, as this will burn off drippings. 5. Use meats containing less fat. 6. Always grill chicken on low, meat side down for 20 minutes and turn to skin side for another 20 minutes. Follow above steps. 7. If flare up continues, move meats to warming rack until flame settles down. 8. Never spray water on gas flames—it will destroy your grill.

<table>
<tr><th>Problems</th><th>Possible Solutions</th></tr>
<tr><td>Burner blows out.</td><td>1. Check for any burner defects.
2. Check for proper burner installation.
3. Make certain the fuel mixture is not too lean.
4. Make sure the gas supply is sufficient.
5. See if the LP tank is empty.</td></tr>
<tr><td>Low heat, LP gas.</td><td>The propane regulator assembly incorporates an excess flow device designed to supply the grill with sufficient gas flow under normal conditions, yet control excess gas flow.
Rapid changes in pressure can trigger the excess flow device, providing a low flame and low temperature. If the tank valve is turned open to allow gas flow while a burner valve is open, the surge of pressure will cause the device to activate. The device will remain closed until the pressure is equalized. This should occur within 5 seconds.

To ensure this does not cause difficulty in lighting the grill, follow these instructions:

1. Make sure all burner valves are “OFF.”
2. Open the tank valve and wait 5 seconds.
3. Light the burner one at a time following the lighting instructions listed in the left door and page 19.</td></tr>
<tr><td>Low heat, natural gas.</td><td>Gas pressure is affected by gas line and length of gas line from house gas line. Follow the recommendations in the chart below.
<table>
<tr><th colspan="2">From House to Grill</th></tr>
<tr><th>Distance</th><th>Tubing Size</th></tr>
<tr><td>Up to 25'</td><td>3/8" diameter</td></tr>
<tr><td>26' - 50'</td><td>1/2" diameter</td></tr>
<tr><td>51' - 100'</td><td>2/3" of run 3/4"
1/3" of run 1/2"</td></tr>
</table></td></tr>
<tr><td>Low heat generated with knob in “HI” position.</td><td>1. Make certain the problem is isolated to only one burner. If it appears so, clean the orifice and burner, clearing ports of any obstruction.
2. Check for a bent or kinked fuel hose.
3. Make sure the air shutter is properly adjusted.
4. Check for proper gas supply and pressure.
5. Pre-heat the grill for a full 15 minutes.
6. If using LP gas, check for an empty tank.</td></tr>
</table>

LIMITED WARRANTY (Model # 720-0697)

The manufacturer warrants to the original consumer-purchaser only that this product *(Model #720-0697)* shall be free from defects in workmanship and materials after correct assembly and under normal and reasonable home use for the periods indicated below beginning on the date of purchase. The manufacturer reserves the right to require photographic evidence of damage, or that defective parts be returned, postage and/or freight pre-paid by the consumer, for review and examination.

- TUBE BURNERS: 3 year *LIMITED* warranty against perforation.
- COOKING GRIDS and FLAME TAMERS: 1 year *LIMITED* warranty; *does not cover dropping, chipping, scratching, or surface damage.*
- STAINLESS STEEL PARTS: 1 year *LIMITED* warranty against perforation; *does not cover cosmetic issues like surface corrosion, scratches and rust.*
- ALL OTHER PARTS: 1 year *LIMITED* warranty (Includes, but not limited to, valves, frame, housing, cart, control panel, igniter, regulator, hoses) **Does not cover chipping, scratching, cracking surface corrosion, scratches or rust.*

Upon consumer supplying proof of purchase as provided herein, Manufacturer will repair or replace the parts which are proven defective during the applicable warranty period. Parts required to complete such repair or replacement shall be free of charge to you except for shipping costs, as long as the purchaser is within the warranty period from the original date of purchase. The original consumer-purchaser will be responsible for all shipping charges of parts replaced under the terms of this limited warranty. This limited warranty is applicable in the United States and Canada only, is only available to the original owner of the product and is *not transferable*. Manufacturer requires reasonable proof of your date of purchase. Therefore, you should retain your sales receipt and/or invoice. If the unit was received as a gift, please ask the gift-giver to send in the receipt on your behalf, to the below address. Defective or missing parts subject to this limited warranty will not be replaced without registration or proof of purchase. This limited warranty applies to the functionality of the product ONLY and does not cover cosmetic issues such as scratches, dents, corrosions or discoloring by heat, abrasive and chemical cleaners or any tools used in the assembly or installation of the appliance, surface rust, or the discoloration of stainless steel surfaces. Surface rust, corrosion, or powder paint chipping on metal parts that does not affect the structural integrity of the product is not considered a defect in workmanship or material and is not covered by this warranty. This limited warranty will not reimburse you for the cost of any inconvenience, food, personal injury or property damage. If an original replacement part is not available, a comparable replacement part will be sent. You will be responsible for all shipping charges of parts replaced under the terms of this limited warranty.

MANUFACTURER WILL NOT PAY FOR:

- Service calls to your home.
- Repairs when your product is used for other than normal, single-family household or residential use.
- Damage resulting from accident, alteration, misuse, lack of maintenance/cleaning, abuse, fire, flood, acts of God, improper installation, and installation not in accordance with electrical or plumbing codes or misuse of product..
- Any food loss due to product failures.
- Replacement parts or repair labor costs for units operated outside the United States or Canada.
- Pickup and delivery of your product.
- Postage fees or photo processing fees for photos sent in as documentation.
- Repairs to parts or systems resulting from unauthorized modifications made to the product.
- The removal and/or reinstallation of your product.
- Shipping cost, standard or expedited, for warranty/non warranty and replacement parts.

DISCLAIMER OF IMPLIED WARRANTIES; LIMITATION OF REMEDIES

Repair or replacement of defective parts is your exclusive remedy under the terms of this limited warranty. Manufacturer will not be responsible for any consequential or incidental damages arising from the breach of either this limited warranty or any applicable implied warranty, or for failure or damage resulting from acts of God, improper care and maintenance, grease fire, accident, alteration, replacement of parts by anyone other than manufacturer, misuse, transportation, commercial use, abuse, hostile environments (inclement weather, acts of nature, animal tampering), improper installation or installation not in accordance with local codes or printed manufacturer instructions.

THIS LIMITED WARRANTY IS THE SOLE EXPRESS WARRANTY GIVEN BY THE MANUFACTURER. NO PRODUCT PERFORMANCE SPECIFICATION OR DESCRIPTION WHEREVER APPEARING IS WARRANTED BY MANUFACTURER EXCEPT TO THE EXTENT SET FORTH IN THIS LIMITED WARRANTY. ANY IMPLIED WARRANTY PROTECTION ARISING UNDER THE LAWS OF ANY STATE, INCLUDING IMPLIED WARRANTY OF MERCHANTABILITY OR FITNESS FOR A PARTICULAR PURPOSE OR USE, IS HEREBY LIMITED IN DURATION TO THE DURATION OF THIS LIMITED WARRANTY.

Neither dealers nor the retail establishment selling this product has any authority to make any additional warranties or to promise remedies in addition to or inconsistent with those stated above. Manufacturer's maximum liability, in any event, shall not exceed the documented purchase price of the product paid by the original consumer. This warranty only applies to units purchased from an authorized retailer and or re-seller. NOTE: Some states do not allow an exclusion or limitation of incidental or consequential damages, so some of the above limitations or exclusions may not apply to you; this limited warranty gives you specific legal rights as set for herein. You may also have other rights which vary from state to state.

If you wish to obtain performance of any obligation under this limited warranty, you should write to:

Nexgrill Customer Relations
5270 Edison Avenue
Chino, CA 91710

All consumer returns, parts orders, general questions, and troubleshooting
assistance can be acquired by calling 1-800-913-8999 in USA and 1-800-648-5864 in Canada.

GrillMaster® is a registered trademark of Sunbeam Products, Inc. used under license. Distributed by Nexgrill Industries, Inc.

REPLACEMENT PARTS LIST

For replacement parts, call our customer service department at 1-800-913-8999 in USA and 1-800-648-5864 in Canada, 7 a.m. – 5 p.m., PST, Monday – Friday.

REF#	DESCRIPTION	WARRANTY COVERAGE	QTY	REF#	DESCRIPTION	WARRANTY COVERAGE	QTY
01	Main Lid	1yr	1pc	30	Lighting Rod	1yr	1pc
02	Hood Buffer B	1yr	2pcs	31	Cart Caster Insert	1yr	2pcs
03	Main Lid Screw	1yr	2pcs	32Q	Bottom Panel, LP	1yr	1pc
04	Temperature Gauge	1yr	1pc	33Q	Cart Frame	1yr	2pcs
05	Logo	1yr	1pc	34Q	Cart Leg Rear, Right	1yr	1pc
06	Flame Tamer	1yr	4pcs	35Q	Cart Leg Front, Right	1yr	1pc
07	Cooking Grid w/ Hole	1yr	2pcs	36	Wheel	1yr	2pcs
08	Warming Rack	1yr	1pc	37	Diagonal Bar Barrier	1yr	1pc
09	Main Lid Handle Seat, Left	1yr	1pc	38	Condiment Tray	1yr	1pc
10	Main Lid Handle Seat, Right	1yr	1pc	39	Fix Bar	1yr	1pc
11	Main Lid Handle Tube	1yr	1pc	40	Front Panel	1yr	1pc
12	Hood Buffer A	1yr	2pcs	41	Tank Bolt	1yr	1pc
13Q	Main Burner Bowl Assembly	Non-replaceable	1pc	42Q	Cart Frame, Rear	1yr	1pc
14Q	Front Baffle	1yr	1pc	43Q	Side Burner Control Panel	1yr	1pc
15	Main Gas Valve	1yr	5pcs	44	Side Burner Pipe	1yr	1pc
16	Pulse Ignite Module	1yr	1pc	45	Side Burner Igniter Wire	1yr	1pc
17	Regulator, LP	1yr	1pc	46Q	Side Burner Bowl Assembly	1yr	1pc
18	Side Manifold	1yr	1pc	47	Side Burner Cooking Grid	1yr	1pc
19	Side Burner Flex Gas Line	1yr	1pc	48	Side Burner Lid	1yr	1pc
20	Main Manifold	1yr	1pc	49	Side Burner Lid Hinge Rod	1yr	2pcs
21	Main Control Panel	1yr	1pc	50	Side Burner Lid Hinge Rod Pin	1yr	2pcs
22	Bezel	1yr	4pcs	51	Grease Tray	1yr	1pc
23	Control Knob	1yr	5pcs	52	Grease Box	1yr	1pc
24Q	Side Shelf, Left	1yr	1pc	53Q	Main Burner Igniter Wire A	1yr	1pc
25Q	Side Shelf Panel, Front	1yr	1pc	54Q	Main Burner Igniter Wire B	1yr	1pc
26Q	Triangle Bracket, Left	1yr	1pc	55Q	Main Burner Igniter Wire C	1yr	1pc
27Q	Triangle Bracket, Right	1yr	1pc	56Q	Main Burner Igniter Wire D	1yr	1pc
28Q	Cart Leg Front, Left	1yr	1pc	57	Main Burner	3yrs	4pcs
29Q	Cart Leg Rear, Left	1yr	1pc	58	Main Burner Pin Assembly	1yr	4pcs

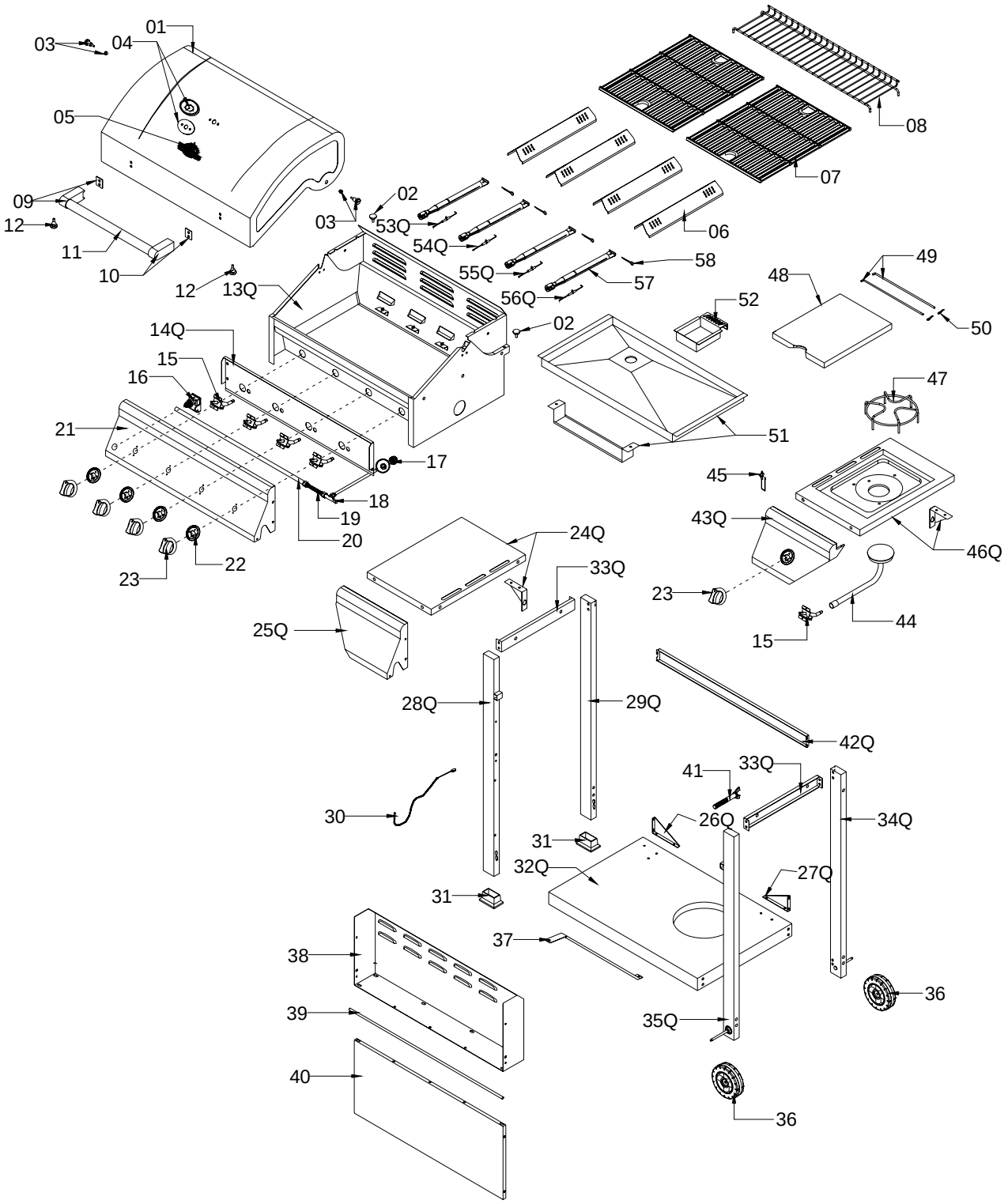

Printed in China