Member's Mark®

Assembly & Operating Instructions

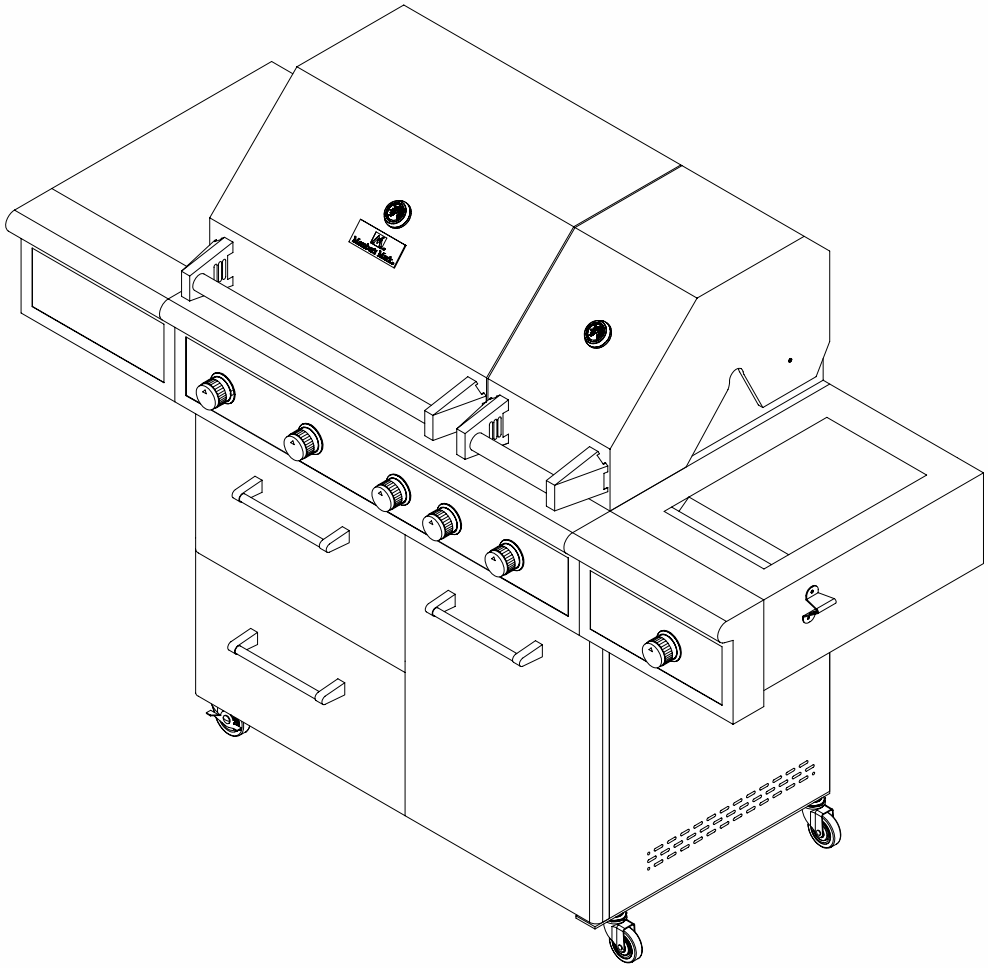

Canada Item#: 629373369

FOR NATURAL GAS USE ONLY

L18Y07N-1

This instructions manual contains important information necessary for the proper assembly and safe use of the appliance.
Read and follow all warnings and instructions before assembling and using the appliance. Keep this manual for future reference.

Model: **730-0584**

For Outdoor Use Only

Table of Contents

Safety Instruction	**2-7**
Check list	**8**
Assembly Instruction	**9-13**
To Match the Light Grill	**14**
Operating Instruction	**15**
Grill Lighting Instruction	**16-17**
Lighting Illustration	**18**
Motor Instruction	**19**
Grill Light	**20**
Care and Maintenance	**21-22**
Trouble Shooting	**23-26**
Exploded View	**27**
Part List	**28-29**
Ordering Parts & Grill Hints	**30**
Grill Cooking Chart	**31-32**
Grill Recipe Suggestion	**33-35**
Limited Warranty	**36**

Safety Instruction

DANGER

If you smell gas:

1 **Shut off gas to the appliance.**
2 **Extinguish any open flame.**
3 **Open lid**
4 **If odor continues, keep away from the appliance and immediately call you gas supplier or your fire department.**

WARNING

1. Do not store or use gasoline or other flammable liquids or vapors in the vicinity of this or any other appliance.

Failure to comply with these instructions could result in a fire or explosion that could cause serious bodily injury, death, or property damage.

Combustion by products produced when using this product contain chemicals known to the States of California to cause cancer, birth defects, or other reproductive harm

Your grill will be very hot. Never lean over the cooking area while using your grill. Do not touch cooking surfaces, grill housing, lid or any other grill parts while the grill is in operation, or until the gas grill has cooled down after use.

WARNING

ELECTRICAL GROUNDING INSTRUCTIONS This appliance (light & rotisserie motor) is equipped with a plug and should be plugged directly into a properly grounded receptacle. When installed, must be electrically grounded in accordance with local codes or in the absence of local codes, with the National Electrical Code, ANSI/NFPA 70 or the Canadian Electrical Code, CSA C22.1 DO NOT cut or remove the grounding prong from this plug.

1. To protect against electric shock, do not immerse cord or plugs in water or other liquid.
2. Unplug from the outlet when not in use and before cleaning. Allow to cool before putting on or taking off parts.
3. Do not operate any outdoor cooking gas appliance with a damaged cord, plug, or after the appliance malfunctions or has been damaged in any manner. Contact the manufacturer for repair.
4. Do not let the cord hang over the edge of a table of touch hot surfaces.
5. Do not use an outdoor cooking gas appliance for purposed other than intended.
6. When connecting, first connect plug to the outdoor cooking gas appliance then plug appliance into the outlet.
7. Use only a Ground Fault Interrupt (GFI) protected circuit with this outdoor cooking gas appliance.
8. Never remove the grounding plug or use with an adapter of 2 prongs.
9. Use only extension cords with a 3 prong grounding plug, rated for the power of the equipments, and approved for outdoor use with a W-A marking.

WARNING

Do not try lighting this appliance without reading the "LIGHTING INSTRUCTIONS" section of this manual.

TESTED IN ACCORDANCE WITH ANS Z21.58 CSA 1.6-2007 STANDARD FOR OUTDOOR COOKING GAS APPLIANCE. THIS GRIL IS FOR OUTDOOR USE ONLY.

Grill Installation Codes

Check your local building codes for the proper method of installation. in the absence of local codes, this unit should be installed in accordance with the National Fuel Gas Code ,ANSI Z223.1/NFPA 54,Storage and Handling of Liquefied Petroleum Gases, ANSI /NFPA B149.2 or CSA B149.1 Natural Gas and Propane Installation Code, and the National Electrical Code, ANSI/NFPA 70.

If an external electrical source is utilized: The outdoor cooking gas appliance, when installed, must be electrically grounded in accordance with local codes or, in the absence of local codes, with the National Electrical Code, ANSI/NFPA 70, or the Canadian Electrical Code, CSA C22.1.

WARNING

Keep any electrical supply cord and the fuel supply hose away from any heated surfaces.

CAUTION: Beware of Flashback

CAUTION: Spiders and small insects occasionally spin webs or make nest in the grill burner tubes during transit and warehousing. These webs can lead to gas flow obstruction, which could result in a fire in and around burner tubes. This type of fire is known as "FLASH-BACK" and can cause serious damage to your grill and create an unsafe operating condition for the user.

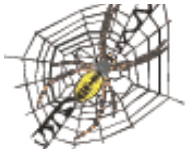

Although an obstructed burner tube is not the only cause of "FLASH-BACK", it is the most common cause.

To reduce the chance of "FLASH-BACK", you must clean the burner tubes before assembling your grill, and at least once a month in late summer or early fall when spiders are most active. Also perform this burner tube cleaning procedure if your grill has not been used for an extended period of time. A clogged tube can be lead to a fire beneath the grill.

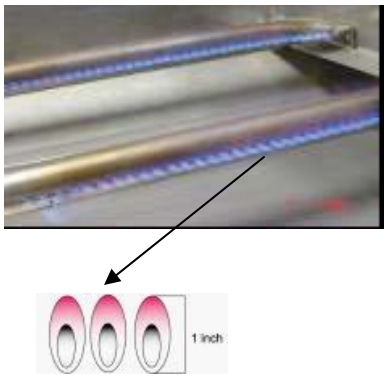

Visually check the burner flames prior to each use. The flames should look like this picture. If they do not, refer to the burner main tenancy part of this manual.

WARNING

Your grill will get very hot. Never lean over the cooking area while using your grill. Do not touch cooking surfaces, grill housing, lid or any other grill hot surface while the grill is in operation, or until the gas grill has cooled down after use.

Failure to comply with these instructions may result in serious bodily injury.

ROTISSERIE DRIVE MOTOR
USE ONLY FOR OUTDOORS, DO NOT EXPOSE TO RAIN.

CAUTION: TO ENSURE CONTINUED PROTECTION AGAINST RISK OF ELECTRIC SHOCK, CONNECT TO PROPERLY GROUNDED OUTLETS ONLY, TO REDUCE THE RISK OF ELECTRIC SHOCK, KEEP EXTENSION CORD CONNECTION DRY AND OFF THE GROUND.

INSECT WARNING:
Spiders and insects can nest in the burners of this and any other grill, and cause the gas to flow improperly. This is a very dangerous condition, which can cause a fire to occur behind and beneath the valve panel, thereby damaging the grill and making it unsafe to operate. Inspect the grill at least twice a year.

WARNING

Keep a spray bottle of soapy water near the gas supply valve and check the connections before each use.

DO NOT USE ALUMINUM FOIL TO LINE THE GRILL RACKS OR GRILL BOTTOM.

This can severely upset combustion airflow or trap excessive heat in the control area.

DO NOT LEAVE THE GRILL UNATTENDED WHILE COOKING.

SAFETY PRACTICES TO AVOID PERSONAL INJURY

When properly cared for, your grill will provide safe, reliable service for many years. However, extreme care must be used as the grill produces intense heat that can increase accident potential. When using this appliance basic safety practices must be followed, including the following:

Do not repair or replace any part of the grill unless specifically recommended in this manual. All other service should be referred to a qualified technician.

This grill is not intended to be installed in or on recreational vehicles or boats

Children should not be left alone or unattended in an area where the grill is being used. Do not allow them to sit, stand or play in or around the grill at any time.

Do not store items of interest to children around or below the grill.

Do not permit clothing, pot holders or other flammable materials to come in contact with or too close to any grate, burner or hot surface until it has cooled. The fabric could ignite and cause personal injury.

For personal safety, wear proper apparel. Loose fitting garments or sleeves should never be worn while using this appliance. Some synthetic fabrics are highly flammable and should not be worn while cooking.

Only certain types of glass, heat-proof glass ceramic, earthenware, or other glazed utensils are suitable for grill use. These materials may break with sudden temperature changes. Use only on low or medium heat settings in accordance with the manufacturer's guidelines.

Do not heat unopened food containers. A build-up of pressure may cause the containers to burst.

Use a covered hand when opening the grill lid.

Never lean over an open grill.

When lighting a burner, pay close attention to what you are doing. Make certain you are aware of which burner you are lighting, so your body and clothing remain clear of open flames.

When using the grill, do not touch the grill rack, burner grate or immediate surroundings as these areas become extremely hot and could cause burns. Use only dry potholders. Moist or damp potholders on hot surfaces may cause steam burns. Do not use a towel or bulky cloth in place or potholders. Do not allow potholders to touch hot portions of the grill rack.

Grease is flammable. Let hot grease cool before attempting to handle it. Do not allow grease deposits to collect in the grease tray at the bottom of the grill's firebox. Clean the grease tray often.

Do not use aluminum foil to line the grill racks or grill bottom. This can severely upset combustion air flow or trap excessive heat in the control area.

For proper lighting and performance of the burners keep the burner ports clean. It is necessary to clean them periodically for optimum performance. The burners will only operate in one position and must be mounted correctly for safe operation.

Clean the grill with caution. To avoid steam burns, do not use a wet sponge or cloth to clean the grill while it is hot. Some cleaners produce toxic fumes or can ignite if applied to a hot surface.

Turn off grill controls and make certain the grill is cool before using any type of aerosol cleaner on or around the grill. The chemical that produces the spraying action could, in the presence of heat, ignite or cause metal parts to corrode.

Do not use the grill to cook excessively fatty meats or other products which promote flare – ups.

Do not operate the grill under unprotected combustible constructions. Use only in well ventilated areas. Do not use in buildings, garages, sheds, breezeways or other such enclosed areas.

Keep the area surrounding the grill free from combustible materials including, fluids, trash, and vapors such as gasoline or charcoal lighter fluid. Do not obstruct the flow of combustion and ventilation air.

Keep the areas surrounding the grill free from combustible materials including, fluids, trash, and vapors such as gasoline or charcoal lighter fluid. Do not obstruct the flow of combustion and ventilation air.

> ⚠ WARNING
>
> This outdoor cooking gas appliance is not intended to be installed in or on boats. recreational vehicles.

CHECKING FOR GAS LEAKS
Never test for leaks with a flame. Prior to First use and at the beginning of each new Season, you must check for gas leaks.

Follow these steps:

1. Make soap solutions by mixing one part liquid detergent and one part water.
2. Turn off heat control valves, and then turn on gas at source

Total gas consumption (per hour)
Of grill with all burners on “IGNITE/HI”

Main burner	55,500 Btu/Hr
Sear burner	15,000 Btu/Hr
Rear burner	10,000 Btu/Hr
Total	80,500 Btu/Hr

NATURAL GAS SAFETY
Your natural gas is designed to operate on natural Gas grill only, at a pressure of 4” water column (1/4 psig or 1.75kpa) regulated at the pre-set supplied regulator. Check with your gas utility for local gas pressure and with your local municipality for building code requirements. If your residential gas Utility line pressure has not utility or gas grill dealer for professional assistance

Check with your gas utility or with local building codes For instructions to install gas supply line, or call a licensed And knowledgeable installer.

It is recommended that an “ ON-OFF” shut off valve be Installed at the gas supply source;
Outdoor after the gas line piping exits outside the wall and Before the quick-disconnect. In a branch fuel line, it should Installed before the

Apply the soap solution to all gas connections. Bubbles Will appear in the soap solutions if connections are not Properly sealed. Tighten or repair as necessary

If you have a gas leak that you cannot repair, turn off the Gas at the source, disconnect the fuel line from grill and Immediately call your grill dealer or gas supplier for Professional assistance, gas line piping enters the ground Indoors in an accessible location near the supply

Pipe sealing compound or pipe thread tape of the type Resistant to the action of natural gas must be used on all Male pipe threads when marking the connection

Disconnect your gas grill from its fuel source when the Gas company is testing the gas supply lines at high Pressure. This appliance and its individual shut off valve Must be disconnected from the gas supply piping system During any pressure testing of that system at pressure in Excess of ½ psi (3.5kpa)

Turn OFF your gas grill when the gas company is testing The gas supply at low pressures. This appliances must be Isolated from the gas supply piping system by closing its Individual manual shut OFF valve during any pressure Testing of the gas supply piping system at pressures equal Or less than ½ psi (3.5kpa)

730-0584 Check list

A. Body Assembly----------1pc	B. Side shelf drawer----------1pc	C. Side shelf drawer Front Panel----------1pc.
D. Side Burner Front Panel---1pc	E. Side Burner----------1pc.	F.Control knob ……1 pc.
G. Bottle Opener----------1pc.	H. Warming Rack----------1pc	I. Small Main Burner Warming Rack----------1pc
J. Cooking Grid----------3pc.	K. Rotisserie Motor Bracket----------1pc.	L. Rotisserie Motor----------1pc..
M. Rotisserie Kit----------1set .	N. Battery----------1pc.	O. Side burner greasy box……1pc

Please read the instructions carefully and follow step by step.

Tools required:

Philips head screwdriver and wrench-not provided

Side Shelf with Drawer and Side Burner Assembly:

A. Attach the side shelf drawer front panel to the drawer by using the screws that are pre-placed onto the left drawer box and front panel. Using the 2 screws on each side, secure the front panel to the drawer. Then, tighten the 3 screws on the front of the drawer box onto the front panel. (Hint: Push the side shelf front panel up until the holes on side shelf panel align with the holes on side shelf drawer .)

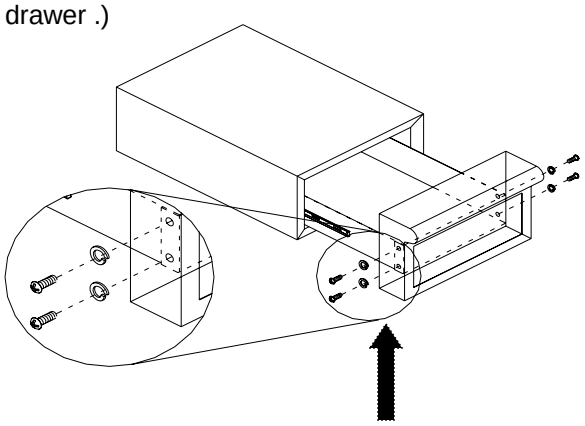

B. Attach side burner front panel to side burner shelf with 4 screws which are already pre-placed on the side burner front panel (see below figure A), then attach bottle opener to side burner panel with 2 screws which are pre-placed onto the side burner panel (see below figure B)

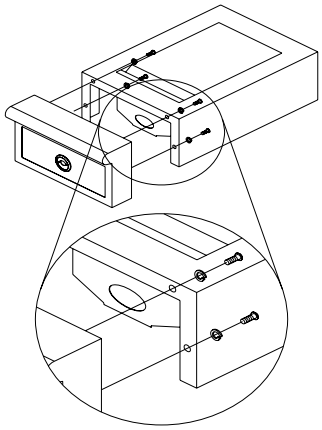

A

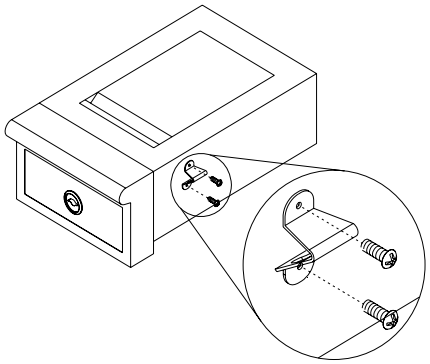

B

C: 4 screws used to attach the left side shelf are already screwed into the cart left panel and side shelf (see the figure below). Remove top 2 screws from the side shelf.
Loosen 2 screws that are pre-placed onto cart left panel (**Hint** ! Do not remove these 2 screws completely).
Align the bottom key holes on side shelf with two loosened screws, and align the remaining side shelf holes with the holes on cart left panel. Attach side shelf to the cart and tighten all 4 screws.

D: There are 4 screws used to attach the side burner shelf are already screwed into the cart right panel and side burner shelf (see the figure below). Remove top 2 screws from the side burner shelf.
Loosen 2 screws that are pre-placed onto cart right panel (**Hint** ! Do not remove these 2 screws completely).
Align the bottom key holes on side burner shelf with two loosened screws, and align the remaining side burner shelf holes with the holes on cart left panel. Attach side shelf to the cart and tighten all 4 screws.

Note: The top 2 screws should be screwed from inside to outside for side shelf and side burner panel, but the bottom 2 screws should be tightened from outside to inside.

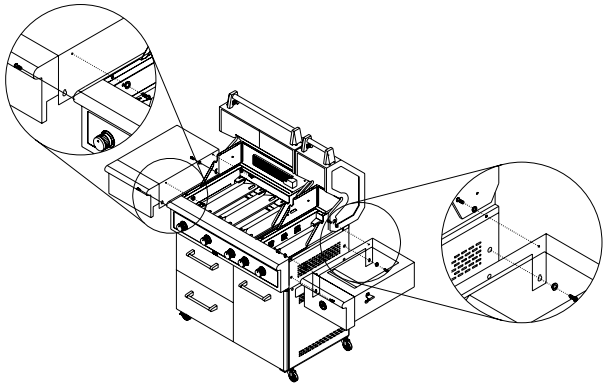

E. Take out the side burner valve assembly from the cart.

Unscrew the two screws on the facing of the valve. Insert side burner valve into side burner control panel, secure the valve to the control panel with the two screws through the bezel and control panel from outside to inside (see the figure below).

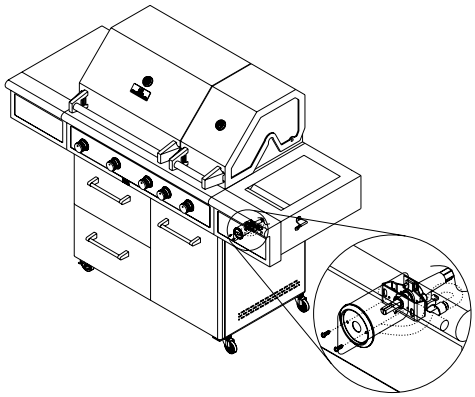

F: Insert the brass connector into the side burner pipe. Tighten the brass connector to the side burner pipe bracket by wrench. Then connect the igniter wire to the side burner valve, see figure below.

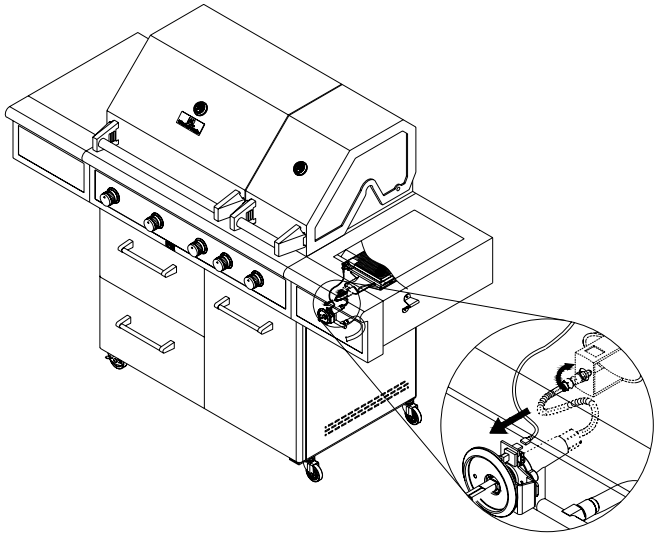

G: Attach the knob to the knob bezel with the Allen wrench that comes with the grill's hardware kit.

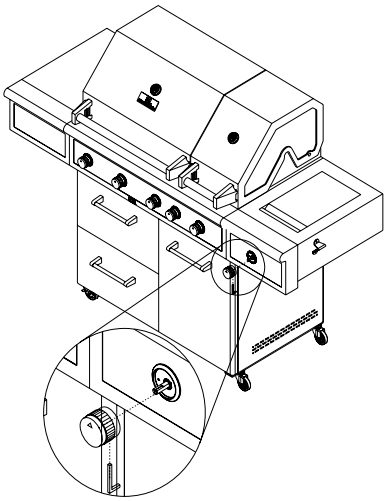

H: Open the door and remove the ignition button housing cap. Insert the AA battery into the housing with the positive(+) terminal facing outward. Screw the ignition button housing back into place.

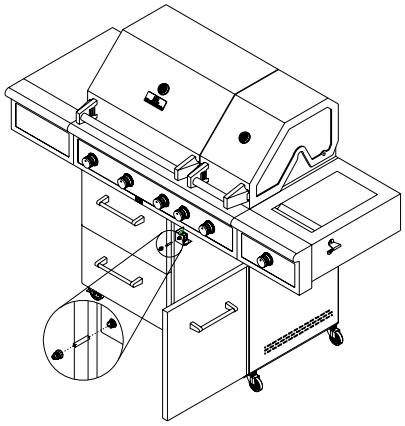

I: Install the rotisserie bracket with 2 screws which are pre-placed on to the bracket and rotisserie skewer; Fit the flame tamers between the notches inside the firebox. Insert warming rack and cooking grids as shown in the figure below.

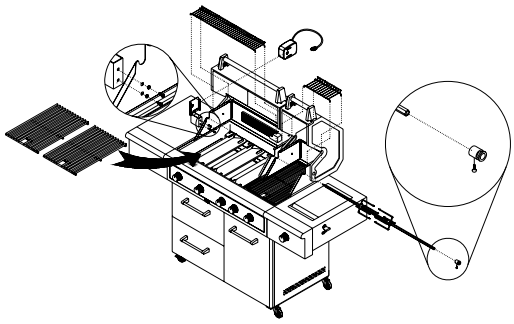

J: Place the side burner grease tray under the side searing burner box from the back of the grill

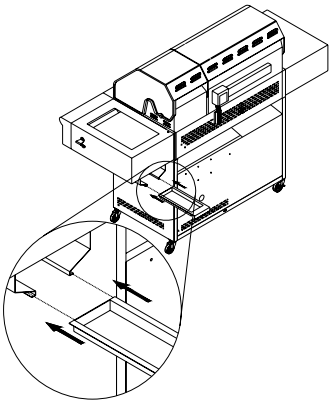

K: The Nature Gas regulator has been factory installed. Attach the PVC Gas Hose to the regulator (See drawing below).

L: Connect the other end of the PVC Gas Hose to the house gas line using the quick-connect fitting.

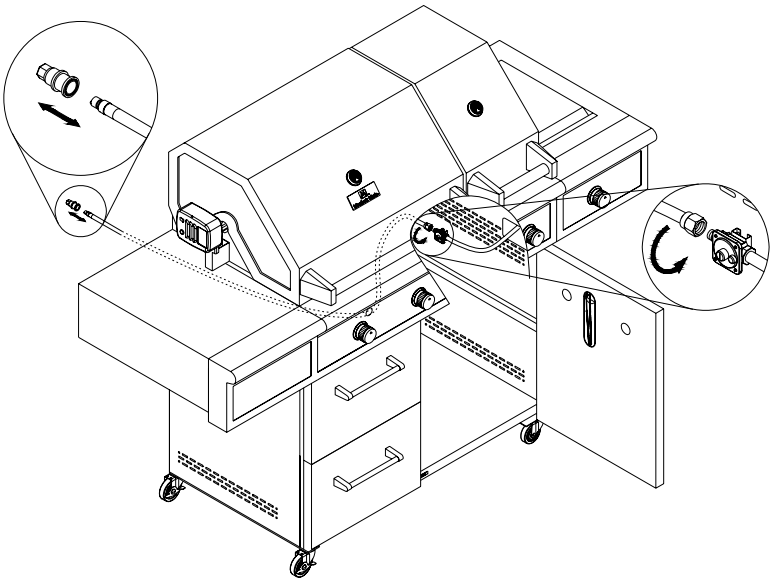

1. If the burner will not light after several attempts then the burner can be match lit.
2. If you have attempted to light the main burners with the igniter, allow 5 minutes for any accumulated gas to dissipate.
3. Insert a match into the lighting rod. Ignite the match and insert through the cooking grid to the burner.
4. Press the control knob and rotate it to the “Ignite/HI” setting. The burner should light immediately.
5. If the burner does not light within seconds turn the knob to the “OFF” position, wait 5 minutes and try again. (As shown below)

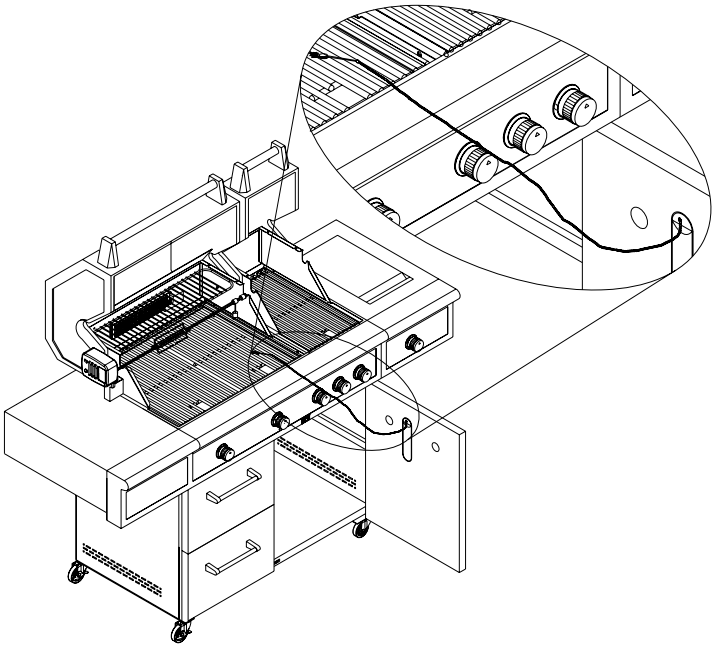

GENERAL USE OF THE GRILL AND ROTISSERIE

Each main burner is rated at 14,000 Btu/hr. The main grill burners encompass the entire cooking area and are side ported to minimize blockage from falling grease and debris. The igniter knobs are located on the lower center portion of the valve panel. Each rotary igniter is labeled on the control panel.

USING THE GRILL

Grilling requires high heat for searing and proper browning. Most foods are cooked at the “HI” heat setting for the entire cooking time. However, when grilling large pieces of meat or poultry, it may be necessary to turn the heat to the lower setting after the initial browning. This cooks the food through without burning the outside. Foods cooked for a long time or foods basted with a sugary marinade may need the lower heat setting near the end of the cooking time.

NOTE: This grill is designed to grill efficiently without the use of lava rocks or briquettes of any kind. Heat is radiated by the flame tamers positioned above each burner.

NOTE: The hot grill sears the food, sealing in the juices. The more thoroughly the grill is preheated, the faster the meat browns and the darker the grill marks.

DO NOT LEAVE THE GRILL UNATTENDED WHILE COOKING.

WARNING: IMPORTANT!

USING THE SIDE BURNER:

Inspect the gas supply hose prior to turning the gas “ON”. If there is evidence of cuts, wear or abrasion, it must be replaced prior to use. Do not use the side burner if the odor of gas is present.

USING ROTISSERIE BURNER

Your grill is capable of performing back burner rotisserie cooking. Light the rear burner as described in the lighting instructions. Once lit, the rotisserie burner will reach cooking temperatures in about 1 minute.

CAUTION: PLEASE TAKE OFF THE WARMING RACK WHEN USING THE ROTISSIERIE BURNER. THE HIGH HEAT COMING FROM THE ROTIS BURNER MAY CAUSE THE WARMING RACK TO WARP.

WARNING: IMPORTANT!

BEFORE LIGHTING…

Inspect the gas supply hose prior to turning the gas "ON". If there is evidence of cuts, wear, or abrasion, it must be replaced prior to use. Do not use the grill if the odor of gas is present. Only the pressure regulator and hose assembly supplied with the unit should be used.

TO LIGHT THE GRILL BURNER:

Make sure all knobs are "OFF" then turn on the gas supply from the LP tank. Always keep your face and body as far from the grill as possible when lighting.

Your stainless steel grill has an exclusive patented built-in ignition. The igniter is built in to the valve. To ignite each burner simply push and turn the control knobs to the HI setting, you will hear the valve click as it sends a spark to the pilot flame. If the burner does not light wait 5 minutes for any excess gas to dissipate and then retry.

WARNING: Always keep your face and body as far away from the burner as possible when lighting.

TO LIGHT THE SIDE BURNER

To light the side burner, remove any cooking utensils from the burner grate. Push and turn the control knob counter - clockwise to the "IGNITE/HI" position. If the burner does not light, turn the control knob to "OFF". If the smell of gas is detected and the igniter is not functioning, immediately turn the control knob "OFF". Allow 5 minutes for any accumulated gas to dissipate. If the side burner igniter is not functioning, see the following section for match lighting.

TO MATCH LIGHT THE GRILL

If the burner will not light after several attempts then the burner can be match lit.
Match light extension rod is located on the inside panel of the door.

TO LIGHT THE MAIN BURNER:

Never substitute regulators and hose assembly for those supplied with the grill. If a replacement is necessary, contact the manufacturer for proper replacement. The replacement must be that specified in the manual.

Screw the regulator (type QCC1) onto the tank. Leak check the hose and regulator connections with a soap and water solution before operating the grill.

If you've just attempted to light the burner with the igniter, allow 5 minutes for any accumulated gas to dissipate. Keep your face and hands as far away from the grill as possible.

1) Insert a lit match attached to the lighting rod through the cooking grids to the burner (see next page)

2) Press the control knob and rotate left to the HI/Light setting, continue to press the knob until the burner ignites. Burner should light immediately.

3) If the burner does not light in 4 seconds turn the knob off, wait 5 minutes and try again.

TO MATCH LIGHT THE SIDE BURNER

Hold a lit extended match near the side burner ports, turn the control knob counterclockwise to "IGNITE/HI". Move your hand immediately once the burner is lit. Rotate the control knob to the desired setting.

Keep a spray bottle of soapy water near the gas supply valve and check the connections before each use.

Do not attempt to light the grill if odor of gas is present. Call for service

1-800-790-1299

FLAME CHARACTERISTICS

Check for proper burner flame characteristics.

Burner flames should be blue and stable with no yellow tips, excessive noise, or lifting. If any of these conditions exist call our customer service line. If the flame is yellow, it indicates insufficient air. If the flame is noisy and tends to lift away from the burner, it indicates to much air

Each burner is adjusted prior to shipment; however, variations in the local gas supply may take minor adjustments necessary.

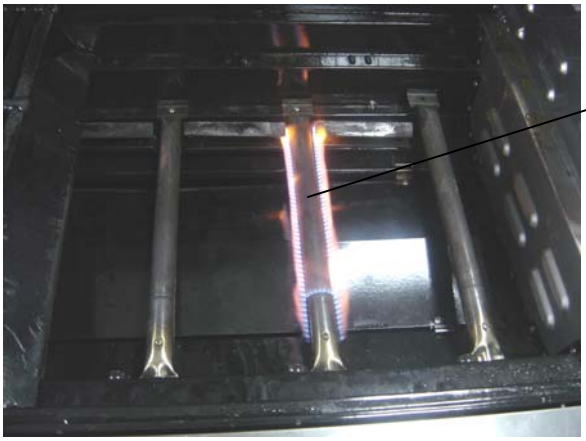

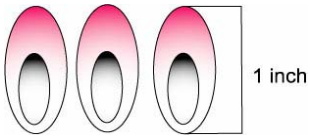

Visually check the burner flames prior to each use. The flames should look like this picture. If they do not, refer to the burner maintenance part of this manual.

Note: Remove all packaging, including straps, before using the grill

Main & Side Burner Lighting Illustration

Step 1.
Make sure the Lid is open

Step 2.
Push and turn main burner knobs to “IGNITE/HI” position. Pilot torch will light. Hold for 3-4 seconds until burner is lit.

Step 3.
You may need to try 3 or 4 times to light the burner. After the burner is lit, adjust the knob as desired.

Rotisserie Burner Lighting Illustration :

Push and turn Rear Burner knob slowly to IGNITE/ON. Hold in until the burner is lit. Once it is lit, continue to press and hold for another 15 seconds to ensure the burner stays lit. If burner does not light up, turn the knob to OFF and repeat the lighting procedure. If burner does not light up after second attempt, turn the knob OFF, wait for 5 minutes, and repeat the lighting procedure or light by match.

Searing Burner Lighting Illustration:

Push and turn the Sear Burner knob slowly to IGNITE/ON. If burner does not light up, turn the knob to OFF and repeat lighting procedure. If burner does not light up after second attempt, turn the knob OFF, wait 5 minutes and repeat lighting procedure or light by match.

- **TO USE MOTOR SAFELY, PLEASE READ WARNING PRIOR TO USE**

ROTISSERIE DRIVE MOTOR

USE ONLY FOR OUTDOORS. DO NOT EXPOSE TO RAIN.

CAUTION: TO ENSURE CONTINUED PROTECTION AGAINST RISK OF ELECTRIC SHOCK, CONNECT TO PROPERLY GROUNDED OUTLETS ONLY, TO REDUCE THE RISK OF ELECTRIC SHOCK, KEEP EXTENSION CORD CONNECTION DRY AND OFF THE GROUND.

WARNING

ELECTRICAL GROUNDING INSTRUCTIONS This appliance (rotisserie motor) is equipped with a plug and should be plugged directly into a properly grounded receptacle. DO NOT cut or remove the grounding prong from this plug.

Keep the rotisserie motor electric cord away from the heated surfaces of the grill. When not in use remove and store the motor in a dry location.

This motor is set for 120V AC & 60Hz, 4W, 40mA, If voltage is exceeded, motor will be burn out.

Rotisserie Operating illustrations:

1. Place rotisserie motor onto the motor bracket, plug into a properly grounded outlet. Ensure that the rotisserie spit rod is inserted into the motor prior to turning on the motor.

Insert rotisserie spit rod

120V AC 60Hz, 4W, 40mA

2. When finished using rotisserie motor, switch to “off position and unplug.

Light Operation Instruction

Make sure light's power switch on the control panel is in the "OFF" position.
Connect power plug to properly grounded outlet.
Turn the light's power switch to "ON".

WARNING

Keep any electrical supply cord away from any heated surface.

Bulb Replacement

1. Make sure the light's power switch on the control panel is in the "OFF" position and power plug is disconnected from outlet.

2. Use a screwdriver to loosen the screw securing the light.

3. Remove light and light casing

4. Remove the glass cover from the light compartment.

5.Use a screwdriver to loosen the two screws locking the bulb.
Pull out the light bulb and replace with a new bulb.

6. Reverse the instruction from steps 5-1 for installation.

Cleaning Method

Follow steps 1-4 above for glass cover removal. Use a damp towel to clean the surface of glass cover.
Make sure the glass cover is completely dry before re-installing.

WARNING

Make sure the light switch is in the "OFF" position and power plug is disconnected from power outlet prior to cleaning the glass cover.

WARNING

The light glass cover should not be in contact with water or any other liquid when it's warm. Sudden change of temperature may cause cracks on glass cover.

Bulb Specification

Bulb Type: Halogen
Wattage: 10 watts per bulb
Voltage: 12 volts
Please contact customer service at 1-800-790-1299
for assistance on bulb replacement information.

WARNING

To ensure continued protection against electric shock:
Connect to properly grounded outlets only.
Do not expose to rain.
Keep extension cord connections dry and off the ground.

STAINLESS STEEL

There are many different stainless steel cleaners available. Always use the mildest cleaning procedure first, scrubbing in the direction of the grain. Specks of grease can gather on the surfaces of the stainless steel and bake on to the surface and give the appearance of rust. For removal use a mild abrasive pad in conjunction with a stainless steel cleaner.

GRILL GRATE

The easiest way to clean the grill is immediately after cooking is completed and after turning off the flame. Wear a barbeque mitt to protect your hand from the heat and steam. Dip a brass bristle barbeque brush in water and scrub the hot grill. Dip the brush frequently in the bowl of water. Steam, created as water contacts the hot grill, assists the cleaning process by softening any food particles. If the grill is allowed to cool before cleaning, cleaning will be more difficult.

ENSURE THAT THE GAS SUPPLY AND THE KNOBS ARE IN THE "OFF" POSITION. MAKE SURE BURNER ARE COOL BEFORE REMOVAL.

GRILL BURNERS

Extreme care should be taken when moving a burner as it must be correctly centered on the orifice before any attempt is made to relight the grill. Frequency of cleaning will depend on how often you use the grill.

MAIN GRILL BURNER CLEANING

Ensure the gas supply is off and the knobs are in the "OFF" position. Make sure the grill is cool. Clean the exterior of the burner with a wire brush. Clear stubborn scale with a metal scraper. Clear any clogged ports with a straightened paper clip. Never use a wooden toothpick as it may break off and clog the port. Please note if insects or other obstructions are blocking the flow of gas through the burner, and if so you will need to call our customer service line 1-800-790-1299.

GREASE TRAY CLEANING:

The grease tray should be emptied and wiped down periodically and washed with a mild detergent and warm water solution. A small amount of sand may be placed in bottom of grease tray to absorb the grease. Check the grease tray frequently, do not allow excess grease to accumulate and overflow out of the grease tray.

BURNER CLEANING:

1. Turn off the gas supply, and make sure all the knobs are in the "OFF" position.
2. Wait for the grill to cool.
3. Clean the exterior of the burner with a wire brush. Use a metal scrapper to stubborn stains.
4. Clear clogged port with a straightened paper clip. Never use a wooden toothpick as it may break off and clog the port
5. If inserts or other obstructions are blocking the flow of gas through the burner, call customer service at 1-800-790-1299

HOW TO REPLACE MAIN BURNER

Step 1. Insert the burner onto the orifice.

Step 2. Secure the main burner on the back wall of fire box with 1 screw.

STAINLESS STEEL :

There are many different stainless steel cleaners available. Always use the mildest cleaning procedure first, scrubbing in the direction of the grain. Do not use steel wool as it will scratch the surface. To touch up noticeable scratches in the stainless steel, sand very lightly with dry 100 grit emery paper in the direction of the grain.

BURNER GRATE:

The top burner grate is porcelain coated cast iron. To avoid burns do not clean a hot grate. They may be wiped while in place with hot, soapy water, rinsed and wiped dry. Never immerse a hot grate in water.

CAUTION:

1. Keep outdoor cooking gas appliance area clear and free from combustible materials, gasoline and other flammable vapors and liquids.
2. Do not obstruct the flow of combustible and ventilation air.
3. Keep the ventilation openings of the cylinder enclosure free and clear from debris.

SPIDER AND INSECT WARNING!!!

Checking and cleaning burner/ venturi tubes for insects and insect nests. A clogged tube can lead to a fire beneath the grill.

Spiders and small insects occasionally spin webs or make nests in the grill burner tubes during transit and warehousing. These webs can lead to gas flow obstruction which could result in a fire in and around burner tubes. This type of fire is known as “FLASH-BACK” and can cause serious damage to your grill and create an unsafe operating condition for the user.

Although an obstructed burner tube is not the only cause of “FLASH-BACK”, it is the most common cause.

To reduce the chance of “FLASH-BACK”, you must clean the burner tubes before using your grill, and at least once a month in late summer or early fall when spiders are most active. Also perform this burner tube cleaning procedure if your grill has not been used for an extended period of time.

WHEN TO LOOK FOR SPIDERS

You should inspect the burners at least once a year or immediately after any of the following conditions occur:

1. The smell of gas in conjunction with the burner flames appearing yellow.
2. The grill does not reach temperature.
3. The grill heats unevenly.
4. The burners make popping noises.

BEFORE CALLING FOR SERVICE

If the grill does not function properly, use the following check list before contacting your customer service. You may save the cost of a service call.

PREHEATING: The grill lid should be in a closed position during the preheat time period. It is necessary to preheat the grill for a short time before cooking certain foods, depending on the type of food and the cooking temperature. Food that requires a high cooking temperature needs a pre-heat period of five minutes; food that requires a lower cooking temperature needs only a period of two to three minutes. There is no need to preheat for casseroles or other foods that require slow cooking.

COOKING TEMPERATURES

High setting-Use this setting for fast warm-up, for searing steaks and chops, and grilling.

Low setting-Use this setting for all roasting, baking, and when cooking very lean cuts such as fish.

These temperatures vary with the outside temperature and the amount of wind.

Cooking with in-direct Heat: You can cook poultry and large cuts of meat slowly to perfection on one side of the grill by indirect heat from the burner on the other side. Heat from the lighted burner circulates gently throughout the grill, cooking the meat or poultry without any direct flame touching it. This method greatly reduces flare-ups when cooking extra fatty cuts, because there is no direct flame to light the fats and juices that drip down during cooking.

CAUTION: If burners go out during operation, close gas supply at source, and turn all gas valves off. Open lid and wait five minutes before attempting to re-light (this allows accumulated gas fumes to clear).

CAUTION: Should a grease fire occur, close gas supply at source, turn off all burners and leave lid closed until fire is out.

CAUTION: DO not attempt to disconnect any gas fitting while your grill is in operation. As with all appliances, proper care and maintenance will keep them in top operating condition and prolong their life. Your gas gill is no exception.

PROBLEM	SOLUTION
When attempting to light my grill, it will not light immediately.	• Make sure you have a spark while you are trying to light the burner (if no spark) • Ensure that the wire is connected to the electrode assembly. • Clean wire (s) and / or electrode with rubbing alcohol and a clean swab. Wipe with a clean cloth. • Check to see if the other burners operate. If so. Check the gas orifice on the malfunctioning burner for an obstruction.
Rotisserie burner will not light.	• Check to see if debris is blocking the electrode. • Check to see if there is a spark that jumps to the burner from the electrode. If no spark is seen, check the battery located inside the igniter box. • Does the infrared back burner light when attempting to light with a match ? If not, check to ensure the gas is on.
Regulator makes noise.	• Vent hose on the regulator may be plugged or regulator may be faulty. • Ensure the vent hole on the regulator is not obstructed. Clear the hole, close the gas control valves. Wait ten minutes and re-start. • Check your flames for proper performance. If the flames are not correct, replace regulator.
Full size cover does not fit the grill.	• Cover may be incorrect for your grill. It may be a tight fit. Ensure the cover is the correct length for your grill. Measure it left to right. Compare to the grill's measurement. • Compare the location and size of the hood portion of the cover to your grill. • Spread the cover and allow it to relax, preferably in warm sunlight or in a warm room. • For grill with a side shelf bunch the cover like a sock, put on left to right.

Rotisserie motor will not turn	• Ensure the motor is connected to a properly grounded power supply. • Ensure the on / off switch is in the on position. • Ensure that the spit is fully inserted into the rotisserie motor • Ensure that the load does not exceed the 40 pound operational capacity. • Ensure that there is no encumbrance or drag.
Grill only heats to 200-300 degrees.	• Check to see if the fuel hose is bent or kinked. • Make sure the grill area is clear of dust. • Make sure the burner and orifices are clean. • Check for spiders and insects. • The regulator has a safety device that restricts the flow of gas in the event of a leak. This safety device can be triggered with out a gas leak. To reset the safety device, turn off all burners and close the LP tank valve. Disconnect the regulator from the LP tank and wait one minute. Reconnect the regulator to the LP tank and slowly open the LP tank valve until the valve is fully open. Light all burners and observe the temperature.
Grill takes a long time to preheat.	• Normal preheat 500-600degrees, takes about 10-15 min. Cold weather and wind may effect your preheat time. • If you are using volcanic rock or briquettes they can increase the preheat time and maximum temperature.
Burner flames are not light blue.	• Too much or not enough air for the flame. • Elevation is the principal cause, however cold weather can affect the mixture. Burner adjustment may be required. • Grill is in a windy location.

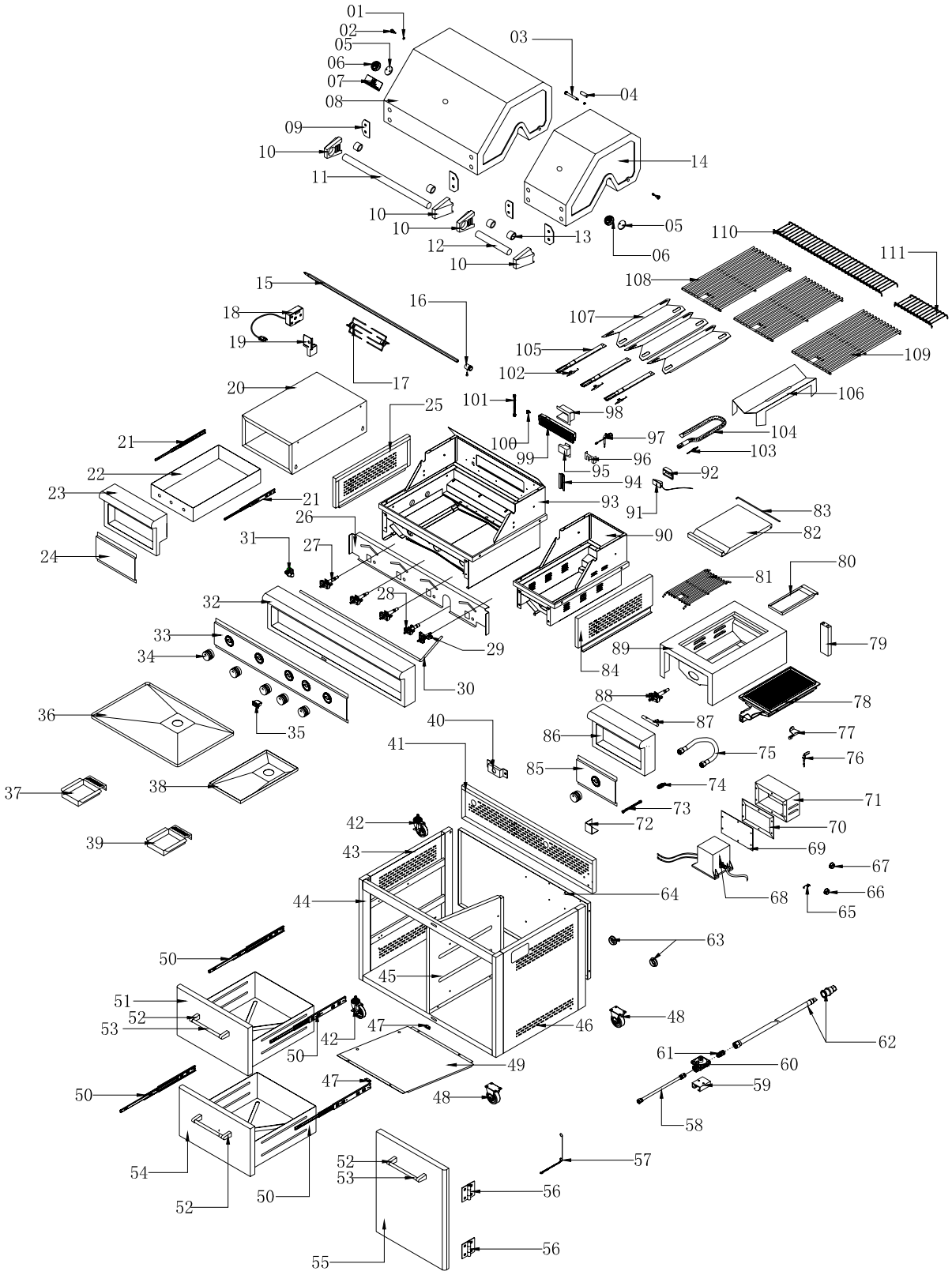
01
02
05
06
07
08
09
10
11
10
10
12
10
03
04
14
13
05
06
110
111
108
107
105
102
109
106
15
16
18
19
17
20
25
101
98
21
100
99
97
96
104
103
22
95
94
92
23
21
93
91
83
26
90
82
31
27
24
80
81
32
28
33
29
89
79
34
84
30
88
78
36
35
40
87
86
77
41
75
76
85
74
37
38
71
73
42
72
70
39
43
69
67
64
68
66
44
65
63
50
45
51
52
53
42
47
46
48
62
50
61
60
49
47
59
50
48
58
54
52
57
53
50
56
52
55
56

No.	Part (Description)	QTY	No.	Part (Description)	QTY
01	Main lid screw cover	3	34	Control knob	6
02	Main lid screw A	2	35	Light switch	1
03	Main lid screw B	1	36	Grease Slide Panel, bottom	1
04	Main lid hinge spacer	1	37	Grease Tray	1
05	Temperature Gauge heat insulating spacer	1	38	Small Main Burner Grease Slide Panel	1
06	Temperature Gauge	1	39	Small Main Burner Grease Tray	1
07	Logo	1	40	Lamps fix bracket	1
08	Main lid	1	41	back panel, top	1
09	Main lid handle heat insulating spacer	4	42	Swivel caster with brake	2
10	Main lid handle seat	4	43	Side panel, left	1
11	Main lid handle tube	1	44	Cart frame assembly, NG	1
12	Small main lid handle tube	1	45	Center panel	1
13	Main lid handle heat insulating cover	4	46	Side panel, right	1
14	Small main lid	1	47	Door magnet	2
15	Spit Rod	1	48	Caster	2
16	Shaft Collar	1	49	Drawer clapboard	1
17	Spit Fork	2	50	Drawer slide	4
18	Rotisserie Motor	1	51	Drawer, Top	1
19	Rotisserie Motor Bracket	1	52	Drawer handle seat	6
20	Side shelf, left	1	53	Drawer handle tube	3
21	Drawer Slide	2	54	Drawer, Bottom	1
22	Side shelf drawer	1	55	Door	1
23	Side Shelf front panel, left	1	56	Door Hinge	2
24	Side shelf temper glass, left	1	57	Lighting rod	1
25	Top Side Panel W/Bracket, Left	1	58	NG Regulator hose	1
26	Front baffle	1	59	NG regulator clamp	1
27	Main Gas Valve	3	60	Regulator, NG	1
28	Rotisserie gas valve	1	61	NG brass connector	1
29	Small main gas valve	1	62	NG hose w/quick connector 12’	1
30	Main manifold	1	63	Rubber grommet	2
31	Electronic Igniter Module	1	64	Back panel	1
32	Main control panel	1	65	Cable strainer	1
33	Main control temper glass	1	66	Plastic bushing A	1

No.	Part (Description)	QTY	No.	Part (Description)	QTY
67	Plastic bushing B	1	93	Main burner bowl assembly	1
68	Transformer	1	94	Igniter wire cover	1
69	Transformer supporting box cover	1	95	Rotisserie Burner pilot cover	1
70	Transformer box waterproof spacer	1	96	Rotisserie Burner pilot bracket	1
71	Transformer supporting box	1	97	Rotisserie burner pilot	1
72	Electronic Igniter module cover	1	98	Rear baffle	1
73	Side burner flex gas line	1	99	Rotisserie burner	1
74	Side burner brass connector	1	100	Rotisserie orifice w/brass elbow	1
75	Side burner hose	1	101	Rotisserie Burner Flex Gas line	1
76	Sear burner igniter wire	1	102	Main burner igniter wire	3
77	Bottle opener	1	103	Small Main Burner Igniter Wire	1
78	Sear burner	1	104	Small Main Burner	1
79	Supporting	1	105	Main burner	3
80	Sear burner greasy tray	1	106	Small Main Burner Flame Tamer	1
81	Side burner cooking grid	1	107	Flame Tamer	3
82	Side burner lid	1	108	Cooking Grid with Hole	2
83	Side Burner Lid Hinge Rod	1	109	Small Main Burner Cooking Grid with hole	1
84	Top Side Panel W/Bracket, right	1	110	Warming Rack	1
85	Side shelf Temper glass, right	1	111	Small Main Burner warming rack	1
86	Side Shelf front panel, right	1			
87	Side manifold	1			
88	Side gas valve	1		Cathy_Zhang 120607	
89	Side Burner bowl assembly frame	1			
90	Small Main Burner Bowl Assembly	1			
91	Lamp	1			
92	Lamp stator cover	1			

Ordering Parts

HOW TO ORDER REPLACEMENT PARTS

To make sure you obtain the correct replacement part(s) for your gas grill, please refer to the parts list on page 27-28. The following information is required to assure getting the correct part.

•Gas grills model number (see data sticker on grill).

•Part number of replacement part needed.

•Description of replacement part needed.

•Quantity of parts needed.

To obtain replacement parts, contact Member's Mark Customer Relations
1-800-790-1299
1-909-718-1953
Fax: 1-909-718-1949

IMPORTANT

Use only factory authorized parts. The use of any part that is not factory authorized can be dangerous. This will also void your warranty.

Keep this assembly and operating instruction manual for convenient referral, and for replacement parts ordering.

CAUTION

Gas valves are present at the factory (valve assembly will be marked accordingly). If you wish to convert at some later date, be sure to contact your gas supplier or grill dealer before making the conversion.

Different orifices must be installed when converting from one type of gas to another. You will also need a data plate indicating what type of gas is used by the grill.

Grill Hints

The doneness of meat, whether rare, medium, or well done, is affected to a large degree by the thickness of the cut. Expert chefs say it is impossible to have a rare doneness with a thin cut of meat.

The cooking time is affected by the kind of meat, the size and shape of the cut, the temperature of the meat when cooking begins, and the degree of doneness desired.

When defrosting meats it is recommended that it be done overnight in the refrigerator as opposed to a microwave. This in general yields a juicier cut of meat.

Use a spatula instead of tongs or a fork to turn the meat, as a spatula will not puncture the meat and let the juices run out.

To get the juiciest meats, add seasoning or salt after the cooking is finished on each side and turn the meat only once (juices are lost when the meat is turned several times). Turn the meat just after the juices begin to bubble to the surface.

Trim any excess fat from the meat before cooking. To prevent steaks or chops from curling during cooking, slit the fat around the edges at 2-inch intervals.

DO NOT LEAVE THE GRILL UNATTENDED WHILE COOKING.

FOOD	WEIGHT OR THICKNESS	HEAT SETTING	APPROXIMATE TIME	SPECIAL INSTRUCTIONS AND TIPS
VEGETABLES				Slice. Dot with butter or margarine. Wrap in heavy -duty foil. Grill, turning occasionally
Fresh Beets Carrots Turnips		Medium	12 to 20 minutes	Grill, turning once. Brush occasionally with melted butter or margarine.
Onion	1/2 inch slices	Medium	8 to 20 minutes	Season with Italian dressing, butter, or margarine.
Potatoes Sweet White	Whole 6 to 8 ounces	Medium High	40 to 60 minutes 45 to 60 minutes	Wrap individually in heavy - duty foil. Grill, rotating occasionally.
Frozen Asparagus Peas Green beans Sprouts		Medium	15 to 30 minutes	Dot with butter or margarine. Wrap in heavy -duty foil. Grill, turning occasionally.
French fries		Medium	15 to 30 minutes	Place in aluminum foil pan. Grill, stirring occasionally
MEATS BEEF Hamburgers	1/2 to 3/4 inch	Medium	10 to 18 minutes	Grill, turning once when juices rise to the surfaces. Do not leave hamburgers unattended since a flare-up could occur quickly. Cook to internal temperature of 160 degrees
Tenderloin		High	8 to 15 minutes	
Rare	1 inch	High	8 to 14 minutes	Trim edges. Grill, turning once.
Medium	1-1/2 inch 1 inch 1-1/2 inch	High Medium to High	11 to 18 minutes 12 to 22 minutes 16 to 27 minutes	
Well - done	1 inch 1-1/2 inches	Medium Medium	18 to 30 minutes 16 to 35 minutes	
LAMB Chop & Steaks Rare	1 inch 1-1/2 inch	Medium to High	10 to 15 minutes 14 to 18 minutes	Trim edges. Grill, turning once.
Medium	1 inch 1-1/2 inch	Medium to High	13 to 20 minutes 18 to 25 minutes	

FOOD	WEIGHT OR THICKNESS	HEAT SETTING	APPROXIMATE TIME	SPECIAL INSTRUCTIONS AND TIPS
PORK Chops	1 inch	Medium	20 to 30 minutes	Trim edges. Grill, turning once. Cook to desired doneness.
Well -done	1 -1/2 inches	Medium	30 to 40 minutes	
Ribs		Medium	30 to 40 minutes	Grill, turning occasionally. During last few minutes brush with barbecue sauce. Turn several times.
Ham steaks (precooked)	1 inch slices	High	4 to 8 minutes	Trim edges. Grill, turning once.
Hot dogs		Low	5 to 10 minutes	Slit skin. Grill, turning once.
POULTRY	2 to 3 pounds	Low or Medium	Up to 1 hour	Place skin side up. Grill, turning and brushing frequently with melted butter, margarine, oil or marinade.
Breasts well –done		Medium	30 to 45 minutes	Marinate as desired.
FISH AND SEAFOOD Halibut Salmon Swordfish	3/4 to 1 inch	Medium to High	8 to 15 minutes	Grill, turning once. Brush with melted butter, margarine or oil to keep moist.
Whole Catfish Rainbow trout	4 to 8 ounce	Medium to High	12 to 20 minutes	Grill, turning once. Brush with melted butter, margarine or oil. Brush with melted butter and lemon juice.

BBQ SALMON

2 large salmon steaks

2 tbs. Oil

Salt & pepper

2 oz. thin bacon slices

2 tbs. Butter

1 tbs. Lemon juice

Spring of parsley

Lemon wedges

Preheat the BBQ.

Brush the steaks with oil and season with salt and pepper. Place on BBQ grill and cook for 10 minutes, turning steaks over halfway cooking time.

Meanwhile fry the bacon in a pan on the side burner. Drain on paper towels. Meld the butter in a small saucepan taking care not to discolor it. Arrange the fish and bacon on serving plates. Pour the butter over and sprinkle with lemon juice. Garnish with parsley springs and lemon wedges. Serve with boiled potatoes tossed in butter and sprinkled with chopped parsley and a crisp lettuce salad.

Note: Substitute catfish, halibut or cod for salmon.

BAKED CHILI CORN

6 medium ears corn, husked

3 tbs. Butter or margarine, melted

Dash ground cumin

Dash ground coriander

About ½ hour before cooking, turn the butter on for grill. Place each corn on a heavy-duty foil. In a bowl, combine remaining ingredients. Mix well. Brush 1-1/2 tsp. Butter mixture over each ear. Close foil and fold up ends to seal. Place on grill. Cook, turning packets occasionally 10 to 12 minutes or until cooked through.

TANGY SEAFOOD KABOBS

1 lb. Large shrimp, shelled & deveined

¾ lbs. sea scallops

2/3 c. chili sauce

¼ c. cider vinegar

butter and sprinkled with chopped parsley and a crisp lettuce salad.

In medium bowl, combine shrimp and scallops. In small bowl combine chili sauce and next six ingredients. Pour over seafood. Toss to coat. Cover, refrigerate 2 hours.
3 tbs. chopped parsley
1 tbs. vegetable oil
1 tbs. Worcestershire sauce
½ tsp. prepared horseradish
1 cove garlic, minced
1 20 oz. Can pineapple chunks in juice, drained half hour before cooking, turn the burner to the grill on full. Drain seafood reserving marinade. On each of twelve 10” skewers, thread 2 shrimps and 2 scallops, alternating with pineapple chunks. Place skewers on grill. Cook 7-10 minutes, often basting and turning.

PORK CHOPS

4 Pork chops

Marinade

1 large onion

2 tbs. lemon juice or vinegar

2 tbs. oil

½ tsp. powdered mustard

2 tsp. Worcestershire sauce

½ tsp. freshly ground black pepper

1 tsp. sugar

½ tsp. paprika

1 clove garlic

Peel, grate onion, and add rest of the ingredients except the pork chops. Mix well. Pour over chops and marinate one hour in a cool place. Turn the BBQ grill on full. Heat 10 minutes.

BBQ the chops brushing with the marinade occasionally. Serve with mixed salad, dressed with vinaigrette flavored with fresh dill.

BARBECUED LONDON BROIL

4 to 6 servings

¾ c. Italian dressing

1 tsp. Worcestershire sauce

1 tsp. dry mustard

¼ tsp. thyme, crushed

1 medium onion, sliced

1 pound flank steak, scored

2 tbs. butter, melted

Combine first 4 ingredients, add onion and marinade flank steak with it. Refrigerate at least 4 hours or overnight. Remove steak and grill on your preheated BBQ grill. Grill 5 to 7 minutes on each side basting frequently with the marinade. In the meantime sauté onions from the marinade in butter in a skillet on your side burner for 3 minutes. To serve, slice steak diagonally into thin slices, sprinkle onions over top. Garnish with vegetable kabobs.

BARBECUED POTATOES and CHEESE

1-1/2 cups shredded cheddar cheese

1 can (10-3/4 oz.) condensed cream of mushroom soup

1/3 cup milk

2 tbs. barbecue sauce

¼ tsp. oregano

¼ tsp. salt

1/8 tsp. pepper

4 cups thinly sliced potatoes (4 medium-sized potatoes)

Preheat grill. Combine cheese, condensed soup, milk, BBQ sauce, oregano, salt and pepper in a large mixing bowl. Stir in potatoes until well coated. Turn into well buttered1-1/2 quart rectangular baking dish. Cover dish with aluminum foil. Bake covered 25 minutes on medium with the lid of your BBQ grill closed. Remove foil and continue baking 15 minutes longer or until potatoes are tender. Let stand 5 minutes before serving.

VEGETABLE KABOBS

3 medium-sized zucchini

12 cherry tomatoes

12 fresh mushrooms

Grated Parmesan cheese

Parboil whole zucchini 5 minutes on your side burner or until just tender. Drain and cut into ½ inch slices. Thread zucchini, tomatoes and mushrooms alternately on each of six skewers. Brush with marinade made of Italian dressing, Worcestershire sauce, mustard and thyme. Grill 5 to 7 minutes turning and basting occasionally. Sprinkle liberally with Parmesan cheese.

FAJITAS

1-1/2 lb. flank steak or boned chicken breasts

2 tbs. oil

½ cup limejuice

½ tsp. salt

½ tsp. celery salt

¼ tsp. garlic powder

½ tsp. pepper

¼ tsp. oregano

¼ tsp. cumin

Flour tortillas lemon

Pound flank steak to ¼ inch thickness or flatten chicken breasts. Mix oil, lime juice and seasonings in a zip lock bag. Add meat and shake bag to coat the meat. Refrigerate overnight or at least 6 to 8 hours. Wrap tortillas in foil. Remove meat from marinade. Cook on a pre-heated gas grill for 5 to 8 minutes on each side. While meat is cooking, heat tortillas on grill. Slice meat across grain in thin slices. Place on hot platter. Squeeze lemon juice over. Wrap meat and any of the following toppings in tortillas: chopped tomatoes, guacamole, sour cream, taco sauce.

BEEF AND LAMB KABOBS

Serve 4

½ lb. boneless sirloin or beef cut into 1” cubes

½ lb. boneless loin of lamb cut into 1” cubes

2/3 c. water, divided

¼ c. chopped onion

2 tbs. soy sauce

¼ c. vegetable oil, divided

1 tbs. dark brown sugar

1 tbs. fresh lemon juice

2 cloves garlic, minced

¼ tsp. ground cumin

¼ tsp. ground coriander

¼ tsp. ground turmeric

1/8 tsp. ground red pepper

1/8 tsp. ground ginger

1 red pepper cut into chunks

1 large banana, cut into chunks

8 small mushrooms

1/3 c. smooth peanut butter

In blender, process 1/3 c. water, onion, soy sauce, 2 tsp. oil and the next 8 ingredients until smooth. Pour over meat cubes and marinate about 4 hours, turning occasionally. Drain and reserve marinade. Onto to four 12” skewers alternately thread meat, pepper, banana and mushrooms. Preheat grill. Brush the kabobs with oil. Grill 7-8 minutes each side.

Bring marinade to boil on the side burner in a saucepan. Add remaining 1/3 c. water and peanut butter. Stir to blend. Heat through. If sauce gets too thick, add 1 tbs. water. Serve sauce with kabobs.

EGGPLANT CAVIAR

1 large eggplant

2 tbs. olive oil

2 tbs. wine vinegar

2 tbs. finely chopped onion

½ clove garlic, minced

1 medium tomato, chopped salt and pepper

Roast eggplant on gas grill over medium flame, turning occasionally until thoroughly cooked. This may take 30 minutes. Remove from grill and cool for handling. Strip off the skin and chop eggplant finely. Add all the seasonings. Chill thoroughly and serve on toast.

CHICKEN TANDOORI STYLE

8 large chicken thighs or drumsticks

1 c. plain nonfat yogurt

½ c. lemon juice

2 tsp. salt

½ tsp. cayenne

½ tsp. black pepper

½ tsp. crushed garlic

½ tsp. grated ginger

1 tbs. corn oil

Combine all the ingredients in a large mixing bowl and marinate the chicken for 8 hours in the refrigerator. Drain the chicken and spread on the spit running the rod on the fleshier side of the bone.

Rotis using the rotisserie burner. Cook on medium high heat for 40 minutes basting occasionally with the remainder of the marinade mixture. Serve with sliced onions and lemon wedges.

SPARE RIBS

Marinade:

1 c. soy sauce

½ c. honey

½ c. vinegar

½ c. dry sherry

2 tsp. chopped garlic

2 tsp. sugar

1 c. water

1 chicken bouillon cube

1 can beer for basting sauce

Marinade ribs for 3 hours. Use marinade for basting by adding beer to it. Place pan under the ribs and baste frequently. To cook ribs select lean, meaty ribs and accordion pleat them with your spit. Slide four prong meat hook down the length of spit and tighten. At the beginning of

the rack and to its center, penetrate the second rib with the pointed end of the spit and push it between the meat. Skip a couple and continue the process until the entire rack is accordion pleated. Fasten the second meat hook into the rack. Turn your rotisserie burner on high. Rotis for 50 minutes or until done.

PORK ROAST

Apple cider vinegar basting sauce:

1 c. apple cider vinegar

6 oz. water

½ stick butter

Salt, pepper, parsley and garlic seasoning

2 oz. lemon juice

10 lbs. pork roast

Time: 1-1/2 hours to 2 hours

Bring pork to room temperature before placing it on the spit rod. Place on the rod and test for balance. Light rotis burner. Turn control knob to high. Use the above basting sauce for rotissing.

TURKEY

12 lb. turkey

Beer basting sauce:

1 can beer

12 oz. water

1 stick butter

1 tsp. salt

1 tsp. pepper

½ tsp. garlic flakes

1 tsp. parsley

Thaw the bird completely. Wash inside out. Securely tie the legs and wings. Light rotisserie burner. Turn to high. Combine all the ingredients for basting sauce in a shallow pan. Place it under the turkey 15 to 20 minutes. Cook for approximately 3 hours. The basting sauce combined with turkey drippings makes a delicious gravy.

LIMITED WARRANTY

Member's Mark warrants to the original consumer-purchaser only that this product ***(Model #730-0584)*** shall be free from defects in workmanship and materials after correct assembly and under normal and reasonable home use for the periods indicated below beginning on the date of purchase. The manufacturer reserves the right to require that defective parts be returned, postage and or freight pre-paid, by the consumer, for review and examination.

- **BURNERS: 5 year *LIMITED* warranty against perforation.**
- **GRIDS, GRATES & ELECTRONIC IGNITION: 3 Year *LIMITED* warranty**
  **Does not cover dropping, chipping, scratching, or surface damage.*
- **STAINLESS STEEL PARTS: 3 Year *LIMITED* warranty against perforation.**
  **Does not cover cosmetic issues like surface corrosion, scratches and rust.*
- **ALL OTHER PARTS: 1 Year *LIMITED* warranty**
  **Does not cover chipping, scratching, cracking surface corrosion, scratches or rust.*

Upon consumer supplying proof of purchase as provided herein, Manufacturer will repair or replace the parts which are proven defective during the applicable warranty period. Parts required to complete such repair or replacement shall be free of charge to you except for shipping costs, as long as the purchaser is within the warranty period from the original date of purchase. **The original consumer-purchaser will be responsible for all shipping charges of parts replaced under the terms of this limited warranty.** This limited warranty is applicable in the United States only, is only available to the original owner of the product and is *not transferable*. Manufacturer requires reasonable proof of your date of purchase. Therefore, you should retain your sales receipt and/or invoice. Defective or missing parts subject to this limited warranty will not be replaced without registration or proof of purchase. This limited warranty applies to the functionality of the product ONLY and does not cover cosmetic issues such as scratches, dents, corrosions or discoloring by heat, abrasive and chemical cleaners or any tools used in the assembly or installation of the appliance, surface rust, or the discoloration of stainless steel surfaces. Surface rust, corrosion, or powder paint chipping on metal parts that does not affect the structural integrity of the product is not considered a defect in workmanship or material and is not covered by this warranty. This limited warranty will not reimburse you for the cost of any inconvenience, food, personal injury or property damage. If an original replacement part is not available, a comparable replacement part will be sent. You will be responsible for all shipping charges of parts replaced under the terms of this limited warranty.

ITEMS MANUFACTURER WILL NOT PAY FOR:
1. Service calls to your home.
2. Repairs when your product is used for other than normal, single-family household or residential use.
3. Damage resulting from accident, alteration, misuse, abuse, fire, flood, acts of God, improper installation, and installation not in accordance with electrical or plumbing codes or use of products not approved by the manufacturer.
4. Any food loss due to product failures.
5. Replacement parts or repair labor costs for units operated outside the United States or Canada.
6. Pickup and delivery of your product.
7. Repairs to parts or systems resulting from unauthorized modifications made to the product.
8. The removal and/or reinstallation of your product.
9. Shipping cost, standard or expedited, for warranty/non warranty and replacement parts.

DISCLAIMER OF IMPLIED WRRANTIES; LIMITATION OF REMEDIES
Repair or replacement of defective parts is your exclusive remedy under the terms of this limited warranty. Manufacturer will not be responsible for any consequential or incidental damages arising from the breach of either this limited warranty or any applicable implied warranty, or for failure or damage resulting from acts of God, improper care and maintenance, grease fire, accident, alteration, replacement of parts by anyone other than Manufacturer, misuse, transportation, commercial use, abuse, hostile environments (inclement weather, acts of nature, animal tampering), improper installation or installation not in accordance with local codes or printed manufacturer instructions.

THIS LIMITED WARRANTY IS THE SOLE EXPRESS WARRANTY GIVEN BY THE MANUFACTURER. NO PRODUCT PERFORMANCE SPECIFICATION OR DESCRIPTION WHEREVER APPEARING IS WARRANTED BY MANUFACTURER EXCEPT TO THE EXTENT SET FORTH IN THIS LIMITED WARRANTY. ANY IMPLIED WARRANTY PROTECTION ARISING UNDER THE LAWS OF ANY STATE, INCLUDING IMPLIED WARRANTY OF MERCHANTABILITY OR FITNESS FOR A PARTICULAR PURPOSE OR USE, IS HEREBY LIMITED IN DURATION TO THE DURATION OF THIS LIMITED WARRANTY.

Neither dealers nor the retail establishment selling this product has any authority to make any additional warranties or to promise remedies in addition to or inconsistent with those stated above.
Manufacturer's maximum liability, in any event, shall not exceed the documented purchase price of the product paid by the original consumer. **This warranty only applies to units purchased from an authorized retailer and or re-seller.**
NOTE: Some states do not allow an exclusion or limitation of incidental or consequential damages, so some of the above limitations or exclusions may not apply to you; this limited warranty gives you specific legal rights as set for herein. You may also have other rights which vary from state to state.

If you wish to obtain performance of any obligation under this limited warranty, you should write to:
Member's Mark Customer Relations
280 Machlin Court
City of Industry, CA 91789

All consumer returns, parts orders, general questions, and troubleshooting assistance can be acquired by calling 1-800-790-1299.